POWER SYSTEMS NETWORK MANAGEMENT
PROTECTION AND SUBSTATION AUTOMATION SYSTEMS
WBS NO: S-13020

ABB AUTOMATION COMPANY LTD.,
414, AL-KHARJ ROAD
SECOND INDUSTRIAL CITY
RIYADH-11383 K.S.A

CONTRACTOR : ABB Contracting Company

CLIENT : National Grid SA

PROJECT : CONSTRUCTION OF NEW 132/13.8kV SS 8709 IN AL-KHARJ CITY

SUBSTATION : S/S 8709

CONTRACT NO. : 11131113/00

TITLE : Assembly Drawing - +AVC (GT1,GT2,GT3)

REV. NO.	DATE	DESCRIPTION
01	13 25	AS PER SEC COMMENT
00	13 06	FOR APPROVAL

AS-BUILT BY _____ DATE _____ | CONTRACT NO. 11131113/00 | JOB ORDER NO. S-13020

DRAWN BY RIZ CHECKED BY JKR
DATE STARTED 04.02.2013 DATE COMPLETED _____
OPRG. DEPT. CTPD ENG. DEPT. AUT-PSAC

COVER SHEET
132/13.8KV (GT1,GT2,GT3) AVC PANEL
S/S 8709 - 132/13.8KV IN AL-KHARJ CITY
RIYADH SAUDI ARABIA

الشركة الوطنية لنقل الكهرباء
نقل الكهرباء
National Grid SA

INDEX	PLANT NO.	DRAWING NUMBER	SHEET NO. SHT	SHEET NO. CONT.	REV. NO.
-	C421	CD-322935	G00	G01	01

NG/D2-D (2012/01)
DMS | VECTOR | NGD200

THIS DRAWING AND THE INFORMATION CONTAINED HEREIN ARE THE SOLE PROPERTY OF NATIONAL GRID SA NO REPRODUCTION IN FULL OR IN PART SHALL BE OBTAINED FROM THIS DOCUMENT WITHOUT THE WRITTEN CONSENT OF ITS OWNER.

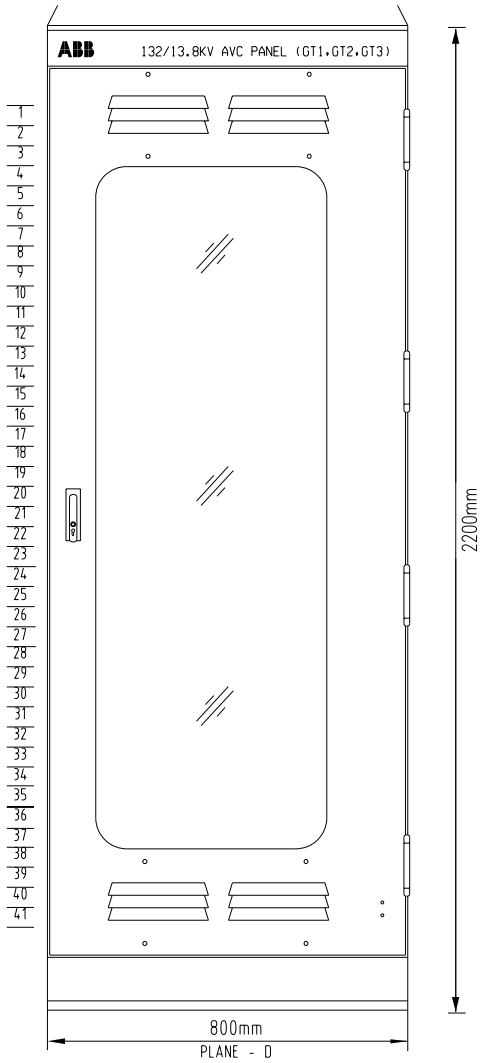

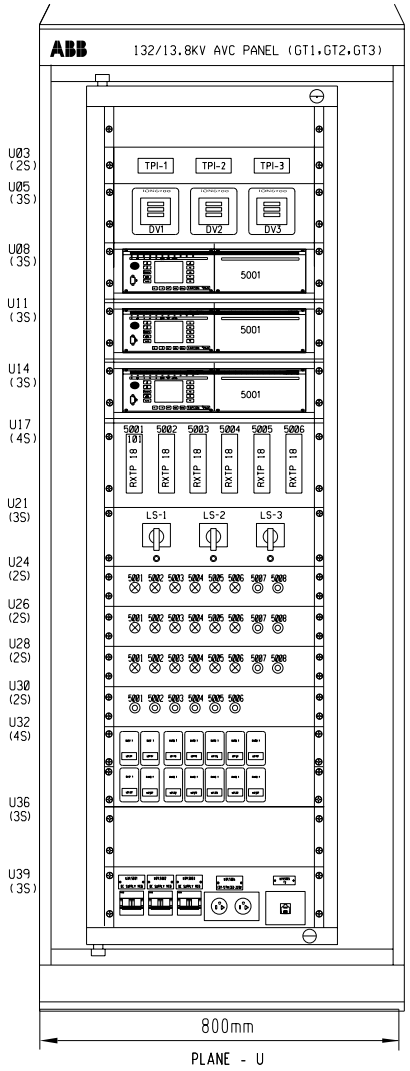

MOUNTING PLANES	
EXTERIOR COLOUR	AIRCRAFT GREY COLOUR TO SHADE NO. RAL7038
INTERIOR COLOUR	SIGNAL WHITE COLOUR TO SHADE NO. RAL9003
CUBICLE TYPE	VSH 200
FRAME	HINGED FRAME, MOVABLE
CUBICLE TYPE	FRONT ACCESS
MATERIAL OF CONSTRUCTION	ALUZINK STEEL
DIMENSIONS	2200x 800x800mm (HxWxD)
CLASS OF PROTECTION	IP 41
APPROX WEIGHT	200KG
CABLE ENTRY	BOTTOM

AS-BUILT BY _____ DATE _____ | CONTRACT NO. 11131113/00 | JOB ORDER NO. S-13020

REV. NO.	DATE	DESCRIPTION
01	13 25	AS PER SEC COMMENT
00	13 06	FOR APPROVAL

DRAWN BY RIZ CHECKED BY JKR
DATE STARTED 04.02.2013 DATE COMPLETED _____
OPRG. DEPT. CTPD ENG. DEPT. AUT-PSAC

ASSEMBLY DRAWING
132/13.8KV (GT1,GT2,GT3) AVC PANEL
S/S 8709 - 132/13.8KV IN AL-KHARJ CITY
RIYADH SAUDI ARABIA

الشركة الوطنية لنقل الكهرباء
نقل الكهرباء
National Grid SA

INDEX	PLANT NO.	DRAWING NUMBER	SHEET NO. SHT	SHEET NO. CONT.	REV. NO.
-	C421	CD-322935	G01	G02	01

NG/D2-D (2012/01)
DMS | VECTOR | NGD200

THIS DRAWING AND THE INFORMATION CONTAINED HEREIN ARE THE SOLE PROPERTY OF NATIONAL GRID SA NO REPRODUCTION IN FULL OR IN PART SHALL BE OBTAINED FROM THIS DOCUMENT WITHOUT THE WRITTEN CONSENT OF ITS OWNER.

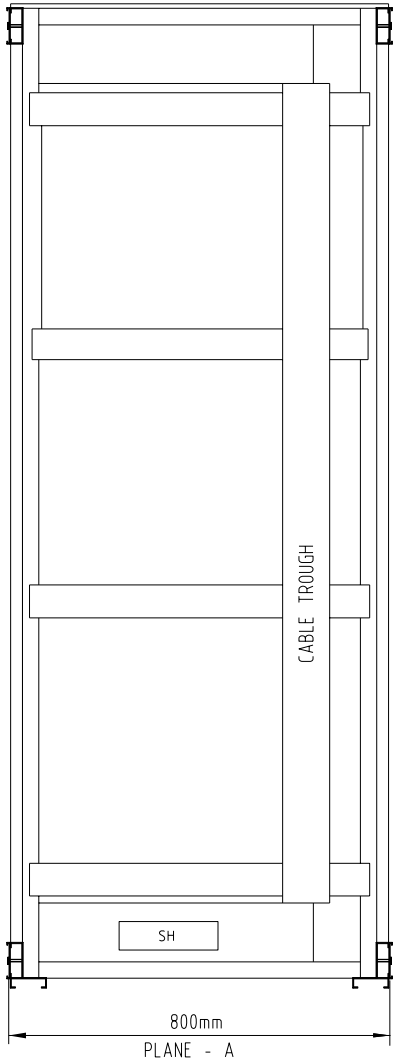

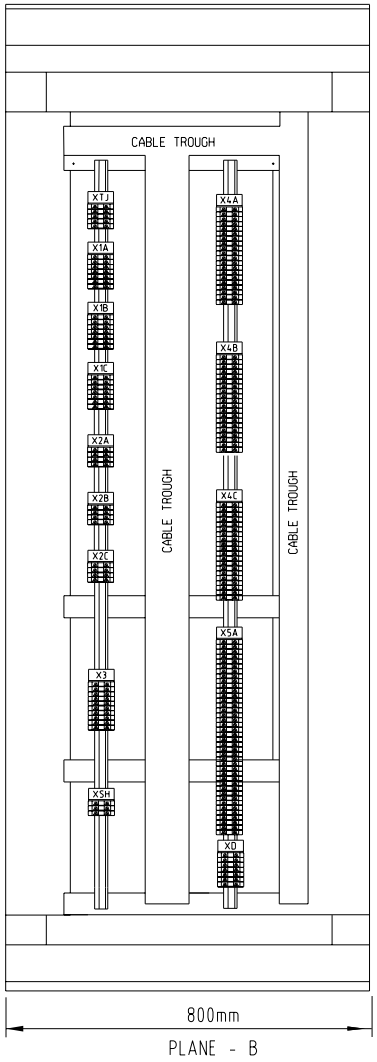

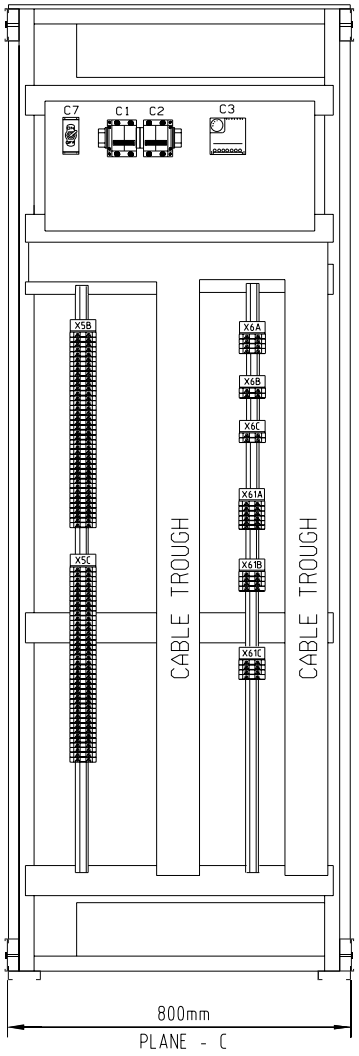

PLANE - B

SCH.REF	DESCRIPTION	TYPE	MAKE
X1A	CT CIRCUITS	OTTA 6T P/P	PHOENIX
X1B	CT CIRCUITS	OTTA 6T P/P	PHOENIX
X1C	CT CIRCUITS	OTTA 6T P/P	PHOENIX
X2A	VT CIRCUITS	D6/8.ST1.RS	ENTRELEC
X2B	VT CIRCUITS	D6/8.ST1.RS	ENTRELEC
X2C	VT CIRCUITS	D6/8.ST1.RS	ENTRELEC
X3	AC CIRCUITS	D6/8.ST1.RS	ENTRELEC
X4A	DC EXT. CIRCUITS	D6/8.ST1.RS	ENTRELEC
X4B	DC EXT. CIRCUITS	D6/8.ST1.RS	ENTRELEC
X4C	DC EXT.CIRCUITS	D6/8.ST1.RS	ENTRELEC
X5A	DC PROTN CIRCUITS	M6/8.RS	ENTRELEC
X5B	DC PROTN CIRCUITS	M6/8.RS	ENTRELEC
X5C	DC PROTN CIRCUITS	M6/8.RS	ENTRELEC
XTJ	TELEPHONE JACK	M6/8.RS	ENTRELEC
XD	BLOCKING DIODE	IN5408	ENTRELEC

PLANE - C

SCH.REF	DESCRIPTION	TYPE	MAKE
X6A	ANNUN CIRCUITS	M6/8.RS	ENTRELEC
X6B	ANNUN CIRCUITS	M6/8.RS	ENTRELEC
X6C	ANNUN CIRCUITS	M6/8.RS	ENTRELEC
X61A	ANNUN CIRCUITS	M6/8.RS	ENTRELEC
X61B	ANNUN CIRCUITS	M6/8.RS	ENTRELEC
X61C	ANNUN CIRCUITS	M6/8.RS	ENTRELEC

AS-BUILT BY _____ DATE _____ | CONTRACT NO. 11131113/00 | JOB ORDER NO. S-13020

REV. NO.	DATE	DESCRIPTION
01	13 25	AS PER SEC COMMENT
00	13 06	FOR APPROVAL

DRAWN BY RIZ CHECKED BY JKR
DATE STARTED 04.02.2013 DATE COMPLETED _____
OPRG. DEPT. CTPD ENG. DEPT. AUT-PSAC

ASSEMBLY DRAWING
132/13.8KV (GT1,GT2,GT3) AVC PANEL
S/S 8709 - 132/13.8KV IN AL-KHARJ CITY
RIYADH SAUDI ARABIA

الشركة الوطنية لنقل الكهرباء
نقل الكهرباء
National Grid SA

INDEX	PLANT NO.	DRAWING NUMBER	SHEET NO. SHT	SHEET NO. CONT.	REV. NO.
-	C421	CD-322935	G02	G03	01

NG/D2-D (2012/01)
DMS | VECTOR | NGD200

THIS DRAWING AND THE INFORMATION CONTAINED HEREIN ARE THE SOLE PROPERTY OF NATIONAL GRID SA NO REPRODUCTION IN FULL OR IN PART SHALL BE OBTAINED FROM THIS DOCUMENT WITHOUT THE WRITTEN CONSENT OF ITS OWNER.

BASE PLATE/ FOUNDATION

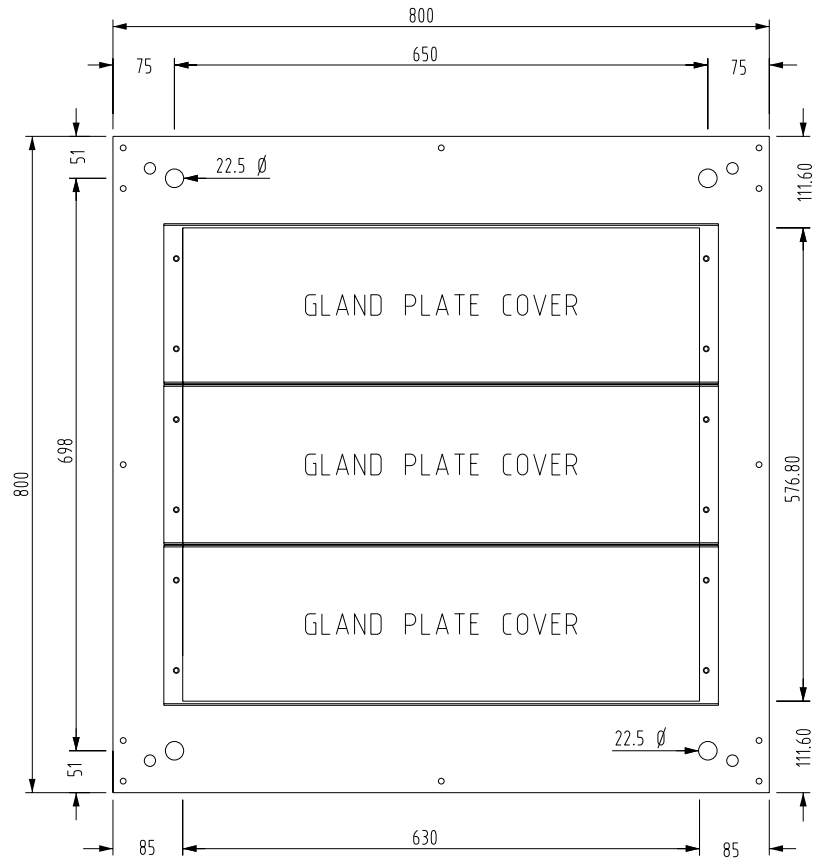

PLAN

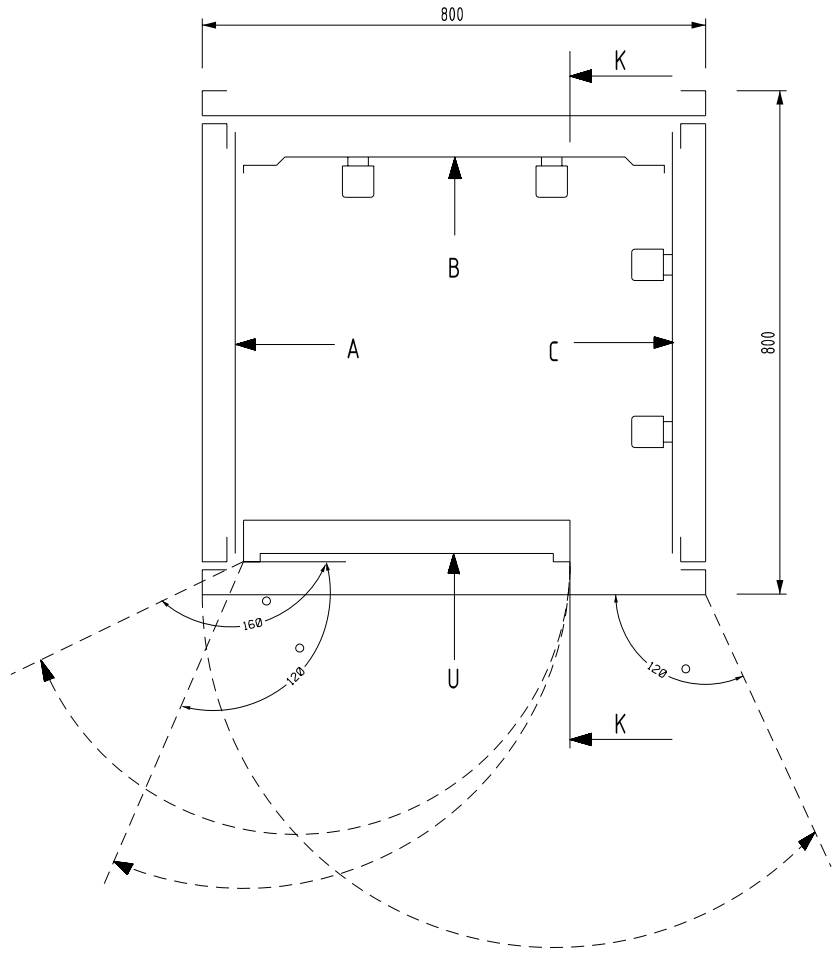

AS-BUILT BY _____ DATE _____	CONTRACT NO. 11131113/00	JOB ORDER NO. S-13020	ASSEMBLY DRAWING	الشركة الوطنية لنقل الكهرباء	نقل الكهرباء National Grid SA
01 / 13 25 / AS PER SEC COMMENT	DRAWN BY RIZ CHECKED BY JKR		132/13.8KV (GT1,GT2,GT3) AVC PANEL		
00 / 13 06 / FOR APPROVAL	DATE STARTED 04.02.2013 DATE COMPLETED _____		S/S 8709 - 132/13.8KV IN AL-KHARJ CITY		
REV. NO. / DATE / DESCRIPTION	OPRG. DEPT. CTPD ENG. DEPT. AUT-PSAC		RIYADH SAUDI ARABIA		

INDEX	PLANT NO.	DRAWING NUMBER	SHEET NO. SHT	SHEET NO. CONT.	REV. NO.
-	C421	CD-322935	G03	G04	01

NG/D2-D (2012/01)

DMS | VECTOR | NGD200

THIS DRAWING AND THE INFORMATION CONTAINED HEREIN ARE THE SOLE PROPERTY OF NATIONAL GRID SA NO REPRODUCTION IN FULL OR IN PART SHALL BE OBTAINED FROM THIS DOCUMENT WITHOUT THE WRITTEN CONSENT OF ITS OWNER.

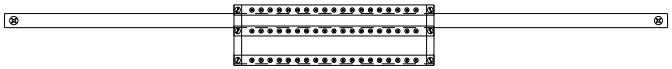

TOP VIEW FOR EARTHING BAR

U PLANE TOP LABEL

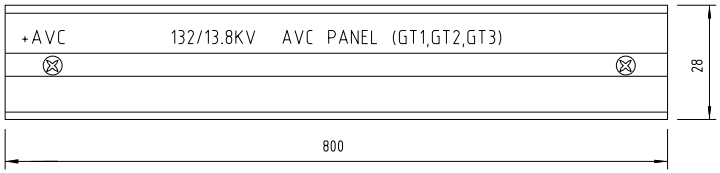

U PLANE BOTTOM LABEL

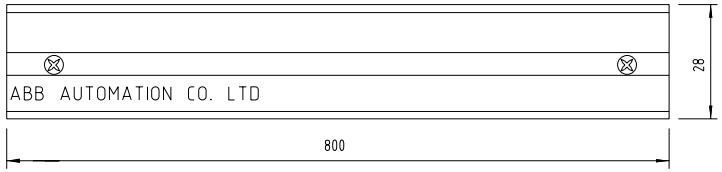

MANUFACTURING LABEL

ABB ABB Automation Co.Ltd.

PROJECT	:	National Grid SA S/S 8709
ORDER REFERENCE	:	2875 RF S13020
YEAR OF MANUFACTURE	:	2013
PANEL NO.	:	+AVC
DRAWING NO.	:	S13020-CD-322936
SPECIFICATION	:	31-TMSS-01,REV.0

MADE IN THE KINGDOM OF SAUDI ARABIA

REV. NO.	DATE	DESCRIPTION
01	13 25	AS PER SEC COMMENT
00	13 06	FOR APPROVAL

AS-BUILT BY _____ DATE _____

CONTRACT NO. 11131113/00 JOB ORDER NO. S-13020

DRAWN BY RIZ CHECKED BY JKR

DATE STARTED 04.02.2013 DATE COMPLETED _____

OPRG. DEPT. CTPD ENG. DEPT. AUT-PSAC

ASSEMBLY DRAWING

132/13.8KV (GT1,GT2,GT3) AVC PANEL

S/S 8709 - 132/13.8KV IN AL-KHARJ CITY

RIYADH SAUDI ARABIA

الشركة الوطنية لنقل الكهرباء

نقل الكهرباء National Grid SA

INDEX	PLANT NO.	DRAWING NUMBER	SHEET NO. SHT	SHEET NO. CONT.	REV. NO.
-	C421	CD-322935	G04	L00	01

NG/D2-D (2012/01)

DMS VECTOR NGD200

THIS DRAWING AND THE INFORMATION CONTAINED HEREIN ARE THE SOLE PROPERTY OF NATIONAL GRID SA NO REPRODUCTION IN FULL OR IN PART SHALL BE OBTAINED FROM THIS DOCUMENT WITHOUT THE WRITTEN CONSENT OF ITS OWNER.

POWER SYSTEMS NETWORK MANAGEMENT
PROTECTION AND SUBSTATION AUTOMATION SYSTEMS
WBS NO: S-13020

ABB AUTOMATION COMPANY LTD.,
414, AL-KHARJ ROAD
SECOND INDUSTRIAL CITY
RIYADH-11383 K.S.A

CONTRACTOR : ABB Contracting Company

CLIENT : National Grid SA

PROJECT : CONSTRUCTION OF NEW 132/13.8kV SS 8709 IN AL-KHARJ CITY

SUBSTATION : S/S 8709

CONTRACT NO. : 11131113/00

TITLE : LIST OF APPARATUS +AVC (GT1,GT2,GT3)

REV. NO.	DATE	DESCRIPTION
01	13 25	AS PER SEC COMMENT
00	13 06	FOR APPROVAL

AS-BUILT BY _____ DATE _____ | CONTRACT NO. 11131113/00 | JOB ORDER NO. S-13020

DRAWN BY RIZ CHECKED BY JKR
DATE STARTED 04.02.2013 DATE COMPLETED _____
ORGN. DEPT. CTPD ENG. DEPT. AUT-PSAC

COVER SHEET
132/13.8KV (GT1,GT2,GT3) AVC PANEL
S/S 8709 - 132/13.8KV IN AL-KHARJ CITY
RIYADH SAUDI ARABIA

الشركة الوطنية لنقل الكهرباء
نقل الكهرباء
National Grid SA

INDEX	PLANT NO.	DRAWING NUMBER	SHEET NO. SHT	SHEET NO. CONT.	REV. NO.
-	C421	CD-322935	L00	L01	01

NG/D2-D (2012/01)
DMS VECTOR NGD200

THIS DRAWING AND THE INFORMATION CONTAINED HEREIN ARE THE SOLE PROPERTY OF NATIONAL GRID SA NO REPRODUCTION IN FULL OR IN PART SHALL BE OBTAINED FROM THIS DOCUMENT WITHOUT THE WRITTEN CONSENT OF ITS OWNER.

SR. NO.	GA. REF.	SCH. REF.	D E S C R I P T I O N	SHEET. NO.	QTY.	TYPE	MAKE	ORDERING INFORMATION
			PANEL +AVC ACCOMMODATING THE FOLLOWING:					
1	U03.5001	TPI-1	TAP POSITION INDICATOR (19 TAPS)	221	3		FAGET	* SUPPLIED BY
	U03.5002	TPI-2	INPUT :4-20mA	222				TRAFO MAF.
	U03.5003	TPI-3	AUX.VOLTAGE : 127V DC	223				
2	U05.5001	DV1	DIGITAL MULTIFUNCTION METER	221	3	ION6200	SCHNEIDER	M6200 A0 A000A0A0R
	U05.5002	DV2	PT RATIO :0-120V (13.8KV/3/120/3)	222				+P620 PB
	U05.5003	DV3	FREQUENCY :45 TO 65 HZ	223				
			ACCURACY CLASS : 0.2					
			AUX.VOLTAGE : 100-300V DC					
3	U08.5001	90-1	AUTOMATIC VOLTAGE REGULATING RELAY	498	3	TAPCON 260	MR	TAPCON 260
	U11.5001	90-2	VOLTAGE LEVEL SETTING : 85V TO 140V OF Un IN STEPS OF 0.1V,					
	U14.5001	90-3	BANDWIDTH : 0.5-9% Un IN STEPS 0.01%					
			O/C BLOCKING 50 TO 210 %					
			U/V BLOCKING - 60 TO 100%					
			O/V DECTION - 100 TO 140%					
4	U17.5001	TS-1	TEST SWITCH FOR AVC RELAY	221	6	RTXPI8	ABB	RK 926 115-AD
	U17.5002	TS-2		222				
	U17.5003	TS-3		223				
	U17.5004	TS-DV1	TEST SWITCH FOR DIGITALVOLTMETER	221				
	U17.5005	TS-DV2		222				
	U17.5006	TS-DV3		223				
5	U21.5001	LS-1	SELECTOR SWITCH FOR AVC LOCAL-SUPERVISORY	235	3	R20 2/4	COMELECTRIC	R193L-204_27-07
	U21.5002	LS-2	2 POSITION, 4 STACKS	335				
	U21.5003	LS-3		435				
6	U24.5001	L01	INDICATION LAMP FOR AVC IN LOCAL	233	3	ML1-100R	ABB	1SFA 611 400 R1001
	U26.5001	L07	LENS :RED	333		MCBH-003		1SFA 611 605 R1400
	U28.5001	L13	LED RATING :110-130V,4-6mA	433		KA2 2141		1SFA 616 921 R2141

REV. NO.	DATE	DESCRIPTION
01	13 25	AS PER SEC COMMENT
00	13 06	FOR APPROVAL

AS-BUILT BY _____ DATE _____

CONTRACT NO. 11131113/00 JOB ORDER NO. S-13020

DRAWN BY RIZ CHECKED BY JKR

DATE STARTED 04.02.2013 DATE COMPLETED _____

OPRG. DEPT. CTPD ENG. DEPT. AUT-PSAC

LIST OF APPARATUS

132/13.8KV (GT1,GT2,GT3) AVC PANEL

S/S 8709 - 132/13.8KV IN AL-KHARJ CITY

RIYADH SAUDI ARABIA

الشركة الوطنية لنقل الكهرباء

نقل الكهرباء National Grid SA

INDEX	PLANT NO.	DRAWING NUMBER	SHEET NO. SHT	SHEET NO. CONT.	REV. NO.
-	C421	CD-322935	L01	L02	01

NG/D2-D (2012/01)

DMS VECTOR NGD200

THIS DRAWING AND THE INFORMATION CONTAINED HEREIN ARE THE SOLE PROPERTY OF NATIONAL GRID SA NO REPRODUCTION IN FULL OR IN PART SHALL BE OBTAINED FROM THIS DOCUMENT WITHOUT THE WRITTEN CONSENT OF ITS OWNER.

SR. NO.	GA. REF.	SCH. REF.	D E S C R I P T I O N	SHEET. NO.	QTY.	TYPE	MAKE	ORDERING INFORMATION
7	U24.5002	L02	INDICATION LAMP FOR AVC IN SUPERVISORY	233	3	ML1-100Y	ABB	1SFA 611 400 R1001
	U26.5002	L08	LENS :YELLOW	333		MCBH-003		1SFA 611 605 R1400
	U28.5002	L14	LED RATING :110-130V,4-6mA	433		KA2 2143		1SFA 616 921 R2143
8	U24.5003	L03	INDICATION LAMP FOR OL TC OUT OF STEP	233	3	ML1-100B	ABB	1SFA 611 400 R1001
	U26.5003	L09	LENS :BLUE	333		MCBH-003		1SFA 611 605 R1400
	U28.5003	L15	LED RATING :110-130V,4-6mA	433		KA2 2144		1SFA 616 921 R2144
9	U24.5004	L04	INDICATION LAMP FOR OL TC TAP CHANGER IN PROGRESS	233	3	ML1-100R	ABB	1SFA 611 400 R1001
	U26.5004	L10	LENS :RED	333		MCBH-003		1SFA 611 605 R1400
	U28.5004	L16	LED RATING :110-130V,4-6mA	433		KA2 2141		1SFA 616 921 R2141
10	U24.5005	L05	INDICATION LAMP FOR AUTO	233	3	ML1-100Y	ABB	1SFA 611 400 R1001
	U26.5005	L11	LENS :YELLOW	333		MCBH-003		1SFA 611 605 R1400
	U28.5005	L17	LED RATING :110-130V,4-6mA	433		KA2 2143		1SFA 616 921 R2143
11	U24.5006	L06	INDICATION LAMP FOR MANUAL	233	3	ML1-100R	ABB	1SFA 611 400 R1001
	U26.5006	L12	LENS :RED	333		MCBH-003		1SFA 611 605 R1400
	U28.5006	L18	LED RATING :110-130V,4-6mA	433		KA2 2144		1SFA 616 921 R2144
12	U24.5007	PB1	PUSH BUTTON FOR OLTC RAISE	235	3	MP1-10B	ABB	1SFA 611 100 R1006
	U26.5007	PB3	BUTTON COLOUR :BLACK	335		MCBH-11		1SFA 611 605 R1111
	U28.5007	PB5	CONTACT DATA :1NO + 1NC	435				
13	U24.5008	PB2	PUSH BUTTON FOR OLTC LOWER	235	3	MP1-10B	ABB	1SFA 611 100 R1006
	U26.5008	PB4	BUTTON COLOUR :BLACK	335		MCBH-11		1SFA 611 605 R1111
	U28.5008	PB6	CONTACT DATA :1NO + 1NC	435				
14	U30.5001	PBES-1	PUSH BUTTON FOR EMERGENCY STOP	237	3	MP1-10B	ABB	1SFA 611 100 R1006
	U30.5003	PBES-2	BUTTON COLOUR :BLACK	337		MCBH-11		1SFA 611 605 R1111
	U30.5005	PBES-3	CONTACT DATA :1NO + 1NC	437				
15	U30.5002	LT1	LAMP TEST BUSH BUTTON	236	3	MP1-10B	ABB	1SFA 611 100 R1006
	U30.5004	LT2	AUX VOLTAGE :110V-125V DC	336		MCBH-11		1SFA 611 605 R1111
	U30.5006	LT3	CONTACT DATA :1NO+1NC	436				

AS-BUILT BY _____ DATE _____ | CONTRACT NO. 11131113/00 | JOB ORDER NO. S-13020

REV. NO.	DATE	DESCRIPTION
01	13 25	AS PER SEC COMMENT
00	13 06	FOR APPROVAL

DRAWN BY RIZ CHECKED BY JKR
DATE STARTED 04.02.2013 DATE COMPLETED _____
OPRG. DEPT. CTPD ENG. DEPT. AUT-PSAC

LIST OF APPARATUS
132/13.8KV (GT1,GT2,GT3) AVC PANEL
S/S 8709 - 132/13.8KV IN AL-KHARJ CITY
RIYADH SAUDI ARABIA

الشركة الوطنية لنقل الكهرباء
نقل الكهرباء
National Grid SA

INDEX	PLANT NO.	DRAWING NUMBER	SHEET NO. SHT	SHEET NO. CONT.	REV. NO.
-	C421	CD-322935	L02	L03	01

NG/D2-D (2012/01)
DMS | VECTOR | NGD200

THIS DRAWING AND THE INFORMATION CONTAINED HEREIN ARE THE SOLE PROPERTY OF NATIONAL GRID SA NO REPRODUCTION IN FULL OR IN PART SHALL BE OBTAINED FROM THIS DOCUMENT WITHOUT THE WRITTEN CONSENT OF ITS OWNER.

SR. NO.	GA. REF.	SCH. REF.	D E S C R I P T I O N	SHEET. NO.	QTY.	TYPE	MAKE	ORDERING INFORMATION
16	U32.101	74AVC1	DUAL COIL RELAY FOR AVC1 DC SUPERVISION	236	3	RXSF1	ABB	RK 271 019-AN
	U32.107	74AVC2	AUX. VOLTAGE :110-125V DC	336				
	U32.301	74AVC3	CONTACTS : 2NO+1NC PER COIL	436				
17	U32.307	IC1X	DUAL COIL RELAY FOR CONTACT MULTIPLICATION(13.8KV)	231	5	RXMB1	ABB	1MRK 000 803-AN
	U32.113	IC2X	AUX. VOLTAGE :110-125V DC					
	U32.313	IC3X	CONTACTS : 3NO PER COIL					
	U32.119	BS1X						
	U32.319	BS2X						
18	U32.125	Y1/Y2	DUAL COIL RELAY FOR OLTC TAP LOWER & RAISE	235	3	RXMB1	ABB	1MRK 000 804-AN
	U32.325	Y3/Y4	AUX. VOLTAGE :110-125V DC	335				
	U32.131	Y5/Y6	CONTACTS : 2NO+1NC PER COIL	435				
19	U32.331	K1/K2	DUAL COIL RELAY FOR OLTC TAP LOWER & RAISE	233	3	RXMB1	ABB	1MRK 000 803-AN
	U32.137	K3/K4	AUX. VOLTAGE :110-125V DC	333				
	U32.337	K5/K6	CONTACTS : 3NO PER COIL	433				
20	U39.5001	Q1	MCB 2 POLE 6A, FOR DC SUPPLY	216	3	S202-K10	ABB	GH S282 0164 R0317
	U39.5002	Q2	WITH 2NC AUXILIARY CONTACT			S2C-H11L		GH S270 1917 R0001
	U39.5003	Q3	Q1 AVC± SUPPLY					
21	U39.5004	CO1	CONVENIENCE OUTLET 10A, 127V AC	211	1	USM45 &	LEGRAND	74140 & 74180
		CO2	CONVENIENCE OUTLET 10A, 220V AC			USMS45		
22	U39.5005	TJ	TELEPHONE JACK IGANG 4WIRE	211	1	EDF410	EDISON	EDF410
23		C1,C2	MINIATURE CIRCUIT BREAKER, 2 POLE, 10A FOR	211	1	S202-K10	ABB	2CDS 252 001 R0427
			CONVENIENCE OUTLET WITH AUXILIARY SWITCH, 1NO + 1NC CONTACTS			S2C-H11L		GH 3270 1917 R0001
		C3	THERMOSTAT FOR SPACE HEATER, 5-60°C	211	1	SK 3110	RITTAL	SK 3110
		C7	ON/OFF SWITCH FOR SPACE HEATER	211	1	M2SS1-10B	ABB	1SFA 611 200 R1006
						MCBH -10		

AS-BUILT BY _____ DATE _____ | CONTRACT NO. 11131113/00 | JOB ORDER NO. S-13020

REV. NO.	DATE	DESCRIPTION
01	13 25	AS PER SEC COMMENT
00	13 06	FOR APPROVAL

DRAWN BY RIZ CHECKED BY JKR
DATE STARTED 04.02.2013 DATE COMPLETED _____
OPRG. DEPT. CTPD ENG. DEPT. AUT-PSAC

LIST OF APPARATUS
132/13.8KV (GT1,GT2,GT3) AVC PANEL
S/S 8709 - 132/13.8KV IN AL-KHARJ CITY
RIYADH SAUDI ARABIA

الشركة الوطنية لنقل الكهرباء
نقل الكهرباء
National Grid SA

INDEX	PLANT NO.	DRAWING NUMBER	SHEET NO. SHT	SHEET NO. CONT.	REV. NO.
-	C421	CD-322935	L03	L04	01

NG/D2-D (2012/01)
DMS | VECTOR | NGD200

THIS DRAWING AND THE INFORMATION CONTAINED HEREIN ARE THE SOLE PROPERTY OF NATIONAL GRID SA NO REPRODUCTION IN FULL OR IN PART SHALL BE OBTAINED FROM THIS DOCUMENT WITHOUT THE WRITTEN CONSENT OF ITS OWNER.

SR. NO.	ITEM DESIGNATION	D E S C R I P T I O N	SHEET. NO.	QTY.	TYPE	MAKE	ORDERING INFORMATION
15	X1A,X1B,X1C	BOLT CONNECTING TERMINAL BLOCKS DISCONNECTIBLE FOR CT CIRCUITS	301	21	OTTA 6T P/P	PHOENIX	0790462
	X2A,X2B,X2C	SPRING LOADEDTERMINAL BLOCKS DISCONNECTIBLE FOR VT CIRCUITS	301	12	D6/8.ST1.RS	ENTRELEC	1SNA 115 831 R0400
	X3	SPRING LOADED TERMINAL BLOCKS DISCONNECTIBLE FOR AC CIRCUITS	301	10	D6/8.ST1.RS	ENTRELEC	1SNA 115 831 R0400
	X61A,X61B,X61C	SPRING LOADED TERMINAL BLOCKS DISCONNECTIBLE FOR ANNUN. CIRCUITS	301	14	M6/8.RS	ENTRELEC	1SNA 115 685 R1200
	X4A,X4B,X4C	SPRING LOADEDTERMINAL BLOCK FOR DC EXT. CIRCUITS	301	63	D6/8.ST1.RS	ENTRELEC	1SNA 115 831 R0400
	X5A,X5B,X5C	SPRING LOADED TERMINAL BLOCK FOR DC PROTN. CIRCUITS	301	120	M6/8.RS	ENTRELEC	1SNA 115 685 R1200
	XTJ	SPRING LOADED TERMINAL BLOCK FOR TELEPHONE JACK	301	5	M6/8.RS	ENTRELEC	1SNA 115 685 R1200
	XSH	SPRING LOADED TERMINAL BLOCKS FOR SPACE HEATER		3	M6/8.RS	ENTRELEC	1SNA 115 685 R1200
	X6A,X6B,X6C	SPRING LOADED TERMINAL BLOCKS FOR ANNUN. CIRCUITS	301	8	M6/8.RS	ENTRELEC	1SNA 115 685 R1200
	XD	TERMINAL BLOCKS WITH BLOCKING DIODE, Vrrm=1kV, If=3A	236,336,436	20	N4/6.S	ENTRELEC	11521310
		AND SURGE TRAP, ENERGY ABSORPTION RATING 8J (10/1000mS)			IN5408	MEJDAF	02-049
					V150ZA1	RS	239-270

AS-BUILT BY _____ DATE _____ | CONTRACT NO. 11131113/00 | JOB ORDER NO. S-13020

REV. NO.	DATE	DESCRIPTION
01	13 25	AS PER SEC COMMENT
00	13 06	FOR APPROVAL

DRAWN BY RIZ CHECKED BY JKR
DATE STARTED 04.02.2013 DATE COMPLETED _____
OPRG. DEPT. CTPD ENG. DEPT. AUT-PSAC

LIST OF APPARATUS
132/13.8KV (GT1,GT2,GT3) AVC PANEL
S/S 8709 - 132/13.8KV IN AL-KHARJ CITY
RIYADH SAUDI ARABIA

الشركة الوطنية لنقل الكهرباء
نقل الكهرباء
National Grid SA

INDEX	PLANT NO.	DRAWING NUMBER	SHEET NO. SHT	SHEET NO. CONT.	REV. NO.
-	C421	CD-322935	L04	L05	01

NG/D2-D (2012/01)
DMS | VECTOR | NGD200

THIS DRAWING AND THE INFORMATION CONTAINED HEREIN ARE THE SOLE PROPERTY OF NATIONAL GRID SA NO REPRODUCTION IN FULL OR IN PART SHALL BE OBTAINED FROM THIS DOCUMENT WITHOUT THE WRITTEN CONSENT OF ITS OWNER.

LABEL REF.	LABEL ENGRAVING	MATERIALS	ENGRAVING	LABEL SIZE	LETTER SIZE
U08.5001	U08.5001 90-1	TRAFOLITE	BLACK LETTERS ON WHITE BACKGROUND	50X15mm	4mm
U11.5001	U11.5001 90-2	TRAFOLITE	BLACK LETTERS ON WHITE BACKGROUND	50X10mm	3mm
U14.5001	U14.5001 90-3	TRAFOLITE	BLACK LETTERS ON WHITE BACKGROUND	50X10mm	3mm
U24:5001	U24.5001 L01	TRAFOLITE	BLACK LETTERS ON WHITE BACKGROUND	50X15mm	4mm
U24:5002	U24.5002 L02	TRAFOLITE	BLACK LETTERS ON WHITE BACKGROUND	50X15mm	4mm
U24:5003	U24.5003 L03	TRAFOLITE	BLACK LETTERS ON WHITE BACKGROUND	50X15mm	4mm
U24:5004	U24.5004 L04	TRAFOLITE	BLACK LETTERS ON WHITE BACKGROUND	50X15mm	4mm
U24:5005	U24.5005 L05	TRAFOLITE	BLACK LETTERS ON WHITE BACKGROUND	50X15mm	4mm
U24:5006	U24.5006 L06	TRAFOLITE	BLACK LETTERS ON WHITE BACKGROUND	50X15mm	4mm
U24:5007	U24.5007 PB1	TRAFOLITE	BLACK LETTERS ON WHITE BACKGROUND	50X15mm	4mm
U24:5008	U24.5008 PB2	TRAFOLITE	BLACK LETTERS ON WHITE BACKGROUND	50X15mm	4mm
U30:5001	U30.5001 PBES-1	TRAFOLITE	BLACK LETTERS ON WHITE BACKGROUND	50X15mm	4mm
U30:5002	U30.5002 LT-1	TRAFOLITE	BLACK LETTERS ON WHITE BACKGROUND	50X15mm	4mm
U26:5001	U26.5001 L07	TRAFOLITE	BLACK LETTERS ON WHITE BACKGROUND	50X15mm	4mm
U26:5002	U26.5002 L08	TRAFOLITE	BLACK LETTERS ON WHITE BACKGROUND	50X15mm	4mm
U26:5003	U26.5003 L09	TRAFOLITE	BLACK LETTERS ON WHITE BACKGROUND	50X15mm	4mm
U26:5004	U26.5004 L10	TRAFOLITE	BLACK LETTERS ON WHITE BACKGROUND	50X15mm	4mm
U26:5005	U26.5005 L11	TRAFOLITE	BLACK LETTERS ON WHITE BACKGROUND	50X15mm	4mm
U26:5006	U26.5006 L12	TRAFOLITE	BLACK LETTERS ON WHITE BACKGROUND	50X15mm	4mm
U26:5007	U26.5007 PB3	TRAFOLITE	BLACK LETTERS ON WHITE BACKGROUND	50X15mm	4mm
U26:5008	U26.5008 PB4	TRAFOLITE	BLACK LETTERS ON WHITE BACKGROUND	50X15mm	4mm
U30:5003	U30.5003 PBES-2	TRAFOLITE	BLACK LETTERS ON WHITE BACKGROUND	50X15mm	4mm
U30:5004	U30.5004 LT-2	TRAFOLITE	BLACK LETTERS ON WHITE BACKGROUND	50X15mm	4mm
U32.125	U32.125 Y1/Y2	ALUMINUM PAPER FOIL	BLACK LETTERS	50X10mm	3mm
U32.325	U32.325 Y3/Y4	ALUMINUM PAPER FOIL	BLACK LETTERS	50X10mm	3mm
U32.131	U32.131 Y5/Y6	ALUMINUM PAPER FOIL	BLACK LETTERS	50X10mm	3mm

LABEL REF.	LABEL ENGRAVING	MATERIALS	ENGRAVING	LABEL SIZE	LETTER SIZE
U28:5001	U28.5001 L13	TRAFOLITE	BLACK LETTERS ON WHITE BACKGROUND	50X15mm	4mm
U28:5002	U28.5002 L14	TRAFOLITE	BLACK LETTERS ON WHITE BACKGROUND	50X15mm	4mm
U28:5003	U28.5003 L15	TRAFOLITE	BLACK LETTERS ON WHITE BACKGROUND	50X15mm	4mm
U28:5004	U28.5004 L16	TRAFOLITE	BLACK LETTERS ON WHITE BACKGROUND	50X15mm	4mm
U28:5005	U28.5005 L17	TRAFOLITE	BLACK LETTERS ON WHITE BACKGROUND	50X15mm	4mm
U28:5006	U28.5006 L18	TRAFOLITE	BLACK LETTERS ON WHITE BACKGROUND	50X15mm	4mm
U28:5007	U28.5007 PB5	TRAFOLITE	BLACK LETTERS ON WHITE BACKGROUND	50X15mm	4mm
U28:5008	U28.5008 PB6	TRAFOLITE	BLACK LETTERS ON WHITE BACKGROUND	50X15mm	4mm
U30:5005	U30.5005 PBES-3	TRAFOLITE	BLACK LETTERS ON WHITE BACKGROUND	50X15mm	4mm
U30:5006	U30.5006 LT-3	TRAFOLITE	BLACK LETTERS ON WHITE BACKGROUND	50X15mm	4mm
U17:5001	U20:101 TS-1	ALUMINUM PAPER FOIL	BLACK LETTERS	50X10mm	3mm
U17:5002	U20:107 TS-2	ALUMINUM PAPER FOIL	BLACK LETTERS	50X10mm	3mm
U17:5003	U20:113 TS-3	ALUMINUM PAPER FOIL	BLACK LETTERS	50X10mm	3mm
U17:5004	U20:119 TS-DV1	ALUMINUM PAPER FOIL	BLACK LETTERS	50X10mm	3mm
U17:5005	U20:125 TS-DV2	ALUMINUM PAPER FOIL	BLACK LETTERS	50X10mm	3mm
U17:5006	U20:131 TS-DV3	ALUMINUM PAPER FOIL	BLACK LETTERS	50X10mm	3mm
U32.101	U32.101 74 AVC1	ALUMINUM PAPER FOIL	BLACK LETTERS	50X10mm	3mm
U32.107	U32.107 74 AVC2	ALUMINUM PAPER FOIL	BLACK LETTERS	50X10mm	3mm
U32.301	U32.301 74 AVC3	ALUMINUM PAPER FOIL	BLACK LETTERS	50X10mm	3mm
U32.307	U32.307 IC1X	ALUMINUM PAPER FOIL	BLACK LETTERS	50X10mm	3mm
U32.113	U32.113 IC2X	ALUMINUM PAPER FOIL	BLACK LETTERS	50X10mm	3mm
U32.313	U32.313 IC3X	ALUMINUM PAPER FOIL	BLACK LETTERS	50X10mm	3mm
U32.119	U32.119 BS1X	ALUMINUM PAPER FOIL	BLACK LETTERS	50X10mm	3mm
U32.319	U32.319 BS2X	ALUMINUM PAPER FOIL	BLACK LETTERS	50X10mm	3mm

AS-BUILT BY _____ DATE _____ | CONTRACT NO. 11131113/00 | JOB ORDER NO. S-13020

REV. NO.	DATE	DESCRIPTION
01	13 25	AS PER SEC COMMENT
00	13 06	FOR APPROVAL

DRAWN BY RIZ CHECKED BY JKR
DATE STARTED 04.02.2013 DATE COMPLETED _____
OPRG. DEPT. CTPD ENG. DEPT. AUT-PSAC

LIST OF APPARATUS
132/13.8KV (GT1,GT2,GT3) AVC PANEL
S/S 8709 - 132/13.8KV IN AL-KHARJ CITY
RIYADH SAUDI ARABIA

الشركة الوطنية لنقل الكهرباء
نقل الكهرباء
National Grid SA

INDEX	PLANT NO.	DRAWING NUMBER	SHEET NO. SHT	SHEET NO. CONT.	REV. NO.
-	C421	CD-322935	L05	L06	01

NG/D2-D (2012/01)
DMS | VECTOR | NGD200

THIS DRAWING AND THE INFORMATION CONTAINED HEREIN ARE THE SOLE PROPERTY OF NATIONAL GRID SA NO REPRODUCTION IN FULL OR IN PART SHALL BE OBTAINED FROM THIS DOCUMENT WITHOUT THE WRITTEN CONSENT OF ITS OWNER.

LABEL REF.	LABEL ENGRAVING	MATERIALS	ENGRAVING	LABEL SIZE	LETTER SIZE
U39.5001	U39.5001 Q1	TRAFOLITE	BLACK LETTERS ON WHITE BACKGROUND	50X15mm	4mm
U39.5002	U39.5002 Q2	TRAFOLITE	BLACK LETTERS ON WHITE BACKGROUND	50X10mm	3mm
U39.5003	U39.5003 Q3	TRAFOLITE	BLACK LETTERS ON WHITE BACKGROUND	50X10mm	3mm
U39.5004	U39.5004 CO1,CO2	TRAFOLITE	BLACK LETTERS ON WHITE BACKGROUND	50X15mm	4mm
U39.5005	U39.5005 TJ	TRAFOLITE	BLACK LETTERS ON WHITE BACKGROUND	50X15mm	4mm
U32.331	U32.331 K1/K2	ALUMINUM PAPER FOIL	BLACK LETTERS	50X10mm	3mm
U32.137	U32.137 K3/K4	ALUMINUM PAPER FOIL	BLACK LETTERS	50X10mm	3mm
U32.337	U32.337 K5/K6	ALUMINUM PAPER FOIL	BLACK LETTERS	50X10mm	3mm

AS-BUILT BY _____ DATE _____ | CONTRACT NO. 11131113/00 | JOB ORDER NO. S-13020

REV. NO.	DATE	DESCRIPTION
01	13 25	AS PER SEC COMMENT
00	13 06	FOR APPROVAL

DRAWN BY RIZ CHECKED BY JKR
DATE STARTED 04.02.2013 DATE COMPLETED _____
OPRG. DEPT. CTPD ENG. DEPT. AUT-PSAC

LIST OF APPARATUS
132/13.8KV (GT1,GT2,GT3) AVC PANEL
S/S 8709 - 132/13.8KV IN AL-KHARJ CITY
RIYADH SAUDI ARABIA

الشركة الوطنية لنقل الكهرباء
نقل الكهرباء
National Grid SA

INDEX	PLANT NO.	DRAWING NUMBER	SHEET NO. SHT	SHEET NO. CONT.	REV. NO.
-	C421	CD-322935	L06	L07	01

NG/D2-D (2012/01)
DMS | VECTOR | NGD200

THIS DRAWING AND THE INFORMATION CONTAINED HEREIN ARE THE SOLE PROPERTY OF NATIONAL GRID SA NO REPRODUCTION IN FULL OR IN PART SHALL BE OBTAINED FROM THIS DOCUMENT WITHOUT THE WRITTEN CONSENT OF ITS OWNER.

LABEL REF.	LABEL ENGRAVING	MATERIALS	ENGRAVING	LABEL SIZE	LETTER SIZE
C1	C1 127V AC SUPPLY MCB	TRAFOLITE	BLACK LETTERS ON WHITE BACKGROUND	50X15mm	4mm
C2	C2 220V AC SUPPLY MCB	TRAFOLITE	BLACK LETTERS ON WHITE BACKGROUND	50X15mm	4mm
C3	C3 THERMOSTAT	TRAFOLITE	BLACK LETTERS ON WHITE BACKGROUND	50X15mm	4mm
C7	C7 ON/OFF SWITCH	TRAFOLITE	BLACK LETTERS ON WHITE BACKGROUND	50X15mm	4mm
DS	DS DOOR SWITCH	TRAFOLITE	BLACK LETTERS ON WHITE BACKGROUND	50X15mm	4mm
IL	IL ILLUMINATION LAMP	TRAFOLITE	BLACK LETTERS ON WHITE BACKGROUND	50X15mm	4mm
SH	SH SPACE HEATER	TRAFOLITE	BLACK LETTERS ON WHITE BACKGROUND	50X15mm	4mm

AS-BUILT BY _____ DATE _____ | CONTRACT NO. 11131113/00 | JOB ORDER NO. S-13020

REV. NO.	DATE	DESCRIPTION
01	13 25	AS PER SEC COMMENT
00	13 06	FOR APPROVAL

DRAWN BY RIZ CHECKED BY JKR
DATE STARTED 04.02.2013 DATE COMPLETED _____
ORGG. DEPT. CTPD ENG. DEPT. AUT-PSAC

LIST OF APPARATUS
132/13.8KV (GT1,GT2,GT3) AVC PANEL
S/S 8709 - 132/13.8KV IN AL-KHARJ CITY
RIYADH SAUDI ARABIA

الشركة الوطنية لنقل الكهرباء
نقل الكهرباء
National Grid SA

INDEX	PLANT NO.	DRAWING NUMBER	SHEET NO. SHT	SHEET NO. CONT.	REV. NO.
-	C421	CD-322935	L07	---	01

NG/D2-D (2012/01)
DMS | VECTOR | NGD200

THIS DRAWING AND THE INFORMATION CONTAINED HEREIN ARE THE SOLE PROPERTY OF NATIONAL GRID SA NO REPRODUCTION IN FULL OR IN PART SHALL BE OBTAINED FROM THIS DOCUMENT WITHOUT THE WRITTEN CONSENT OF ITS OWNER.

POWER SYSTEMS NETWORK MANAGEMENT
PROTECTION AND SUBSTATION AUTOMATION SYSTEMS
WBS NO: S-13020

ABB AUTOMATION COMPANY LTD.,
414, AL-KHARJ ROAD
SECOND INDUSTRIAL CITY
RIYADH-11383 K.S.A

CONTRACTOR : ABB Contracting Company

CLIENT : National Grid SA

PROJECT : CONSTRUCTION OF NEW 132/13.8kV SS 8709 IN AL-KHARJ CITY

SUBSTATION : S/S 8709

CONTRACT NO. : 11131113/00

TITLE : SCHEMATIC DRAWING +AVC

REV. NO.	DATE	DESCRIPTION
01	13 25	AS PER SEC COMMENT
00	13 06	FOR APPROVAL

AS-BUILT BY _____ DATE _____ | CONTRACT NO. 11131113/00 | JOB ORDER NO. S-13020

DRAWN BY RIZ CHECKED BY JKR
DATE STARTED 04.02.2013 DATE COMPLETED _____
OPRG. DEPT. CTPD ENG. DEPT. AUT-PSAC

COVER SHEET
132/13.8KV (GT1,GT2,GT3) AVC PANEL
S/S 8709 - 132/13.8KV IN AL-KHARJ CITY
RIYADH SAUDI ARABIA

الشركة الوطنية لنقل الكهرباء
نقل الكهرباء
National Grid SA

INDEX	PLANT NO.	DRAWING NUMBER	SHEET NO. SHT	SHEET NO. CONT.	REV. NO.
-	C421	CD-322936	001	002	01

NG/D2-D (2012/01)
DMS VECTOR NGD200

THIS DRAWING AND THE INFORMATION CONTAINED HEREIN ARE THE SOLE PROPERTY OF NATIONAL GRID SA NO REPRODUCTION IN FULL OR IN PART SHALL BE OBTAINED FROM THIS DOCUMENT WITHOUT THE WRITTEN CONSENT OF ITS OWNER.

CONTENTS	ABB SHT.NO.	REV.00	REV.01	REV.02
COVER SHEET	001	X		
CONTENTS SHEET	002	X		
GRAPHICAL SYMBOLS FOR DIAGRAMS	011	X		
GRAPHICAL SYMBOLS FOR DIAGRAMS	012	X		
COMMON LEGEND	013	X		
FERRULE AND WIRING DETAILS	014	X		
DRAWING REFERENCES	015	X		
AC SUPPLY FOR ILLUMINATION & POWER SOCKET	211	X		
CUB. LIGHTING, HEATER & SOCKET ALARM CKT.	212	X		
DC SUPPLY DISTRIBUTION	216	X		
CT & VT CIRCUITS 90 RELAY FOR GT1,GT2,GT3	221,222,223	X		
BINARY INPUTS-GT1,GT2,GT3	231,331,431	X		
BINARY INPUTS-GT1,GT2,GT3	233,333,433	X		
TAP CHANGER RAISE/LOWER CIRCUITS	235,335,435	X		
INDICATION CIRCUITS	236,336,436	X		
TAP CHANGER RAISE/LOWER CIRCUITS	237,337,437	X		
STN-COMMN ALARM CIRCUITS	293,393,493	X		
BLOCK REFERENCE	498-502	X		
TERMINAL BLOCK ALLOCATION	503-504	X		

AS-BUILT BY _____ DATE _____ | CONTRACT NO. 11131113/00 | JOB ORDER NO. S-13020

REV. NO.	DATE	DESCRIPTION
01	13 25	AS PER SEC COMMENT
00	13 06	FOR APPROVAL

DRAWN BY RIZ CHECKED BY JKR
DATE STARTED 04.02.2013 DATE COMPLETED _____
OPRG. DEPT. CTPD ENG. DEPT. AUT-PSAC

CONTENTS SHEET
132/13.8KV (GT1,GT2,GT3) AVC PANEL
S/S 8709 - 132/13.8KV IN AL-KHARJ CITY
RIYADH SAUDI ARABIA

الشركة الوطنية لنقل الكهرباء
نقل الكهرباء
National Grid SA

INDEX	PLANT NO.	DRAWING NUMBER	SHEET NO. SHT	SHEET NO. CONT.	REV. NO.
-	C421	CD-322936	002	011	01

NG/D2-D (2012/01)
DMS | VECTOR | NGD200

THIS DRAWING AND THE INFORMATION CONTAINED HEREIN ARE THE SOLE PROPERTY OF NATIONAL GRID SA NO REPRODUCTION IN FULL OR IN PART SHALL BE OBTAINED FROM THIS DOCUMENT WITHOUT THE WRITTEN CONSENT OF ITS OWNER.

SYMBOL	DESCRIPTION
	FRAME CONNECTION
	EARTH CONNECTION
	RESISTOR
	VARIABLE RESISTOR
	RESISTOR WITH PRESET ADJUSTMENT
	CAPACITOR
	SEMICONDUCTOR DIODE USED AS A CAPACITIVE DEVICE
	OPEN CONTACT, MAKE CONTACT
	CLOSED CONTACT, BREAK CONTACT
	CHANGE-OVER CONTACT, BREAK BEFORE MAKE
	MAKE CONTACT WHICH IS EARLY WHEN OPERATING AND LATE WHEN RELEASING
	BREAK CONTACT WHICH IS LATE WHEN OPERATING AND EARLY WHEN RELEASING
	SWITCHING DEVICE WITH MANUAL CONTROL
	MAKE CONTACT DELAYED WHEN OPERATING
	BREAK CONTACT DELAYED WHEN RELEASING
	MAKE CONTACT DELAYED WHEN OPERATING AND RELEASING
	MAIN CONTACT OF A SWITCH DISCONNECTOR
	MAIN CONTACT OF A DISCONNECTOR

SYMBOL	DESCRIPTION
	MAIN CONTACT OF A CIRCUIT BREAKER
	PASSING MAKE CONTACT CLOSING MOMENTARILY DURING OPERATION AND RELEASE
	BREAK CONTACT DELAYED WHEN OPERATING
	MAKE CONTACT DELAYED WHEN RELEASING
	TWO MECHANICAL LINKS CROSSING WITHOUT CONNECTION
	JUNCTION OF MECHANICAL LINKS
	AUTOMATIC RESET
	NON-AUTOMATIC RESET
	SWITCHING DEVICE WITH MANUAL OPERATION AND WITH AUTOMATIC RESET
	SWITCHING DEVICE WITH MANUAL OPERATION AND WITH NON-AUTOMATIC RESET
	CHANGE-OVER SWITCHING DEVICE WITH MANUAL CONTROL AUTOMATIC RESET FROM POSITION 1-2 TO THE NEUTRAL POSITION
	RELAY WITH MAKE CONTACT
	RELAY WITH CHANGE-OVER CONTACT
	RELAY WITH MAKE CONTACT, DELAYED WHEN OPERATING
	RELAY WITH MAKE CONTACT, DELAYED WHEN RELEASING
	RELAY WITH MAKE CONTACT, DELAYED WHEN OPERATING AND RELEASING

SYMBOL	DESCRIPTION
	RELAY WITH TWO MAKE CONTACTS, ONE OF THEM DELAYED WHEN OPERATING
	RELAY WITH TWO ACTUATORS AND A TWO STABLE POSITIONS
	SIGNALLING LAMP
	MECHANICAL INDICATOR WITH AUTOMATIC RESET
	MECHANICAL INDICATOR WITH NON-AUTOMATIC RESET
	ELECTRICALLY CONTROLLED MECHANICAL INDICATOR WITH AUTOMATIC RESET
	ELECTRICALLY CONTROLLED MECHANICAL INDICATOR WITH NON-AUTOMATIC RESET
	RELAY WITH MECHANICAL INDICATOR
	ELECTRO-MECHANICAL POSITION INDICATOR WITH ONE DE-ENERGIZED AND ONE OPERATED POSITION
	ELECTRO-MECHANICAL POSITION INDICATOR WITH ONE DE-ENERGIZED AND TWO OPERATED POSITION
	BELL, BUZZER
	SIREN , HORN

REV. NO.	DATE	DESCRIPTION
01	13 25	AS PER SEC COMMENT
00	13 06	FOR APPROVAL

AS-BUILT BY _____ DATE _____

CONTRACT NO. 11131113/00 | JOB ORDER NO. S-13020

DRAWN BY RIZ CHECKED BY JKR

DATE STARTED 04.02.2013 DATE COMPLETED _____

OPRG. DEPT. CTPD ENG. DEPT. AUT-PSAC

GRAPHICAL SYMBOLS FOR DIAGRARMS

132/13.8KV (GT1,GT2,GT3) AVC PANEL

S/S 8709 - 132/13.8KV IN AL-KHARJ CITY

RIYADH SAUDI ARABIA

الشركة الوطنية لنقل الكهرباء

نقل الكهرباء National Grid SA

INDEX	PLANT NO.	DRAWING NUMBER	SHEET NO. SHT	SHEET NO. CONT.	REV. NO.
-	C421	CD-322936	011	012	01

NG/D2-D (2012/01)

DMS | VECTOR | NGD200

THIS DRAWING AND THE INFORMATION CONTAINED HEREIN ARE THE SOLE PROPERTY OF NATIONAL GRID SA NO REPRODUCTION IN FULL OR IN PART SHALL BE OBTAINED FROM THIS DOCUMENT WITHOUT THE WRITTEN CONSENT OF ITS OWNER.

SYMBOL	DESCRIPTION
	FUSE / LINK
	FUSE WITH THE SUPPLY SIDE INDICATED
	SINGLE-PHASE TRANSFORMER WITH TWO SEPARATE WINDINGS (TWO ALTERNATIVE FORMS)
	SINGLE-PHASE TRANSFORMER WITH THREE SEPARATE WINDINGS (TWO ALTERNATIVE FORMS)
	SINGLE-PHASE TRANSFORMER WITH FERRO MAGNETIC CORE
	SINGLE-PHASE VOLTAGE TRANSFORMER (MULTI-LINE AND SINGLE-LINE REPRESENTATION)
	SINGLE-PHASE VOLTAGE TRANSFORMER WITH TWO SECONDARY WINDINGS (MULTI-LINE AND SINGLE-LINE REPRESENTATION)
	CURRENT TRANSFORMER (MULTI-LINE AND SINGLE-LINE REPRESENTATION)
	CURRENT TRANSFORMER WITH TWO CORES (MULIT-LINE AND SINGLE-LINE REPRESENTATION)
	CURRENT TRANSFORMER WITH TWO SECONDARY WINDINGS ON ONE CORE (MULTI-LINE AND SINGLE-LINE REPRESENTATION)
	FILTER
	HIGH-PASS FILTER
	BAND-PASS FILTER
V	VOLTMETER
A	AMMETER

SYMBOL	DESCRIPTION
W	WATTMETER
Var	VARMETER
PF	POWER FACTOR METER
	POSITION INDICATOR
	SYNCHROSCOPE
V	RECORDING VOLTMETER
W	RECORDING WATTMETER
h	HOUR METER
Wh	WATT-HOUR METER
Wh	WATT-HOUR METER FOR ENERGY FROM A BUSBAR SYSTEM
	ELEMENT WITH STATIC INPUT
	ELEMENT WITH STATIC NEGATED INPUT
	ELEMENT WITH STATIC NEGATED OUTPUT
>	ELEMENT WITH DYNAMIC INPUT
>	ELEMENT WITH DYNAMIC NEGATED INPUT
	ELEMENT WITH INHIBITING INPUT

SYMBOL	DESCRIPTION
	ELEMENT WITH NEGATED INHIBITING INPUT
	ELEMENT WITH INPUT WHICH DOES NOT CARRY ANY LOGIC INFORMATION
X	ELEMENT WITH POSTPONED OUTPUT
&	AND-ELEMENT WITH TWO INPUTS
≥1	OR-ELEMENT WITH TWO INPUTS
≥2	LOGIC THRESHOLD ELEMENT WITH FOUR INPUTS AND THRESHOLD VALUE 2
=2	ELEMENT WITH THREE INPUTS FOR "2 AND ONLY 2"
=1	EXCLUSIVE OR-ELEMENT WITH THREE INPUTS
=	LOGIC IDENTITY ELEMENT WITH THREE INPUTS
>n/2	MAJORITY ELEMENT WITH THREE INPUTS
1	NEGATOR
&	NAND ELEMENT WITH TWO INPUTS
≥1	NOR ELEMENT WITH TWO INPUTS
X Y	BISTABLE ELEMENT

AS-BUILT BY _____ DATE _____ | CONTRACT NO. 11131113/00 | JOB ORDER NO. S-13020

REV. NO.	DATE	DESCRIPTION
01	13 25	AS PER SEC COMMENT
00	13 06	FOR APPROVAL

DRAWN BY RIZ CHECKED BY JKR
DATE STARTED 04.02.2013 DATE COMPLETED _____
OPRG. DEPT. CTPD ENG. DEPT. AUT-PSAC

GRAPHICAL SYMBOLS FOR DIAGRARMS
132/13.8KV (GT1,GT2,GT3) AVC PANEL
S/S 8709 - 132/13.8KV IN AL-KHARJ CITY
RIYADH SAUDI ARABIA

الشركة الوطنية لنقل الكهرباء
نقل الكهرباء
National Grid SA

INDEX	PLANT NO.	DRAWING NUMBER	SHEET NO. SHT	SHEET NO. CONT.	REV. NO.
-	C421	CD-322936	012	013	01

NG/D2-D (2012/01)
DMS | VECTOR | NGD200

THIS DRAWING AND THE INFORMATION CONTAINED HEREIN ARE THE SOLE PROPERTY OF NATIONAL GRID SA NO REPRODUCTION IN FULL OR IN PART SHALL BE OBTAINED FROM THIS DOCUMENT WITHOUT THE WRITTEN CONSENT OF ITS OWNER.

LEGENDS

±R1	DC SUPPLY - MAIN PROTECTION
±R2	DC SUPPLY - SECONDARY PROTECTION
±R3	DC SUPPLY - BACK UP PROTECTION
±IT	DC SUPPLY - INTER TRIP
FL	DC SUPPLY - FLASHING CIRCUIT
BB RS±	DC SUPPLY - BUS BAR - PROTECTION RESET
BB CBF±/CBF±	DC SUPPLY - CBF PROTECTION
R	RESET BUS - ALARM SYSTEM
CR	CONTROL ROOM
ECC	ENERGY CONTROL CENTRE
LOCAL	THE LOCATION OF CONTROLLED DEVICE
REMOTE	ANY OTHER LOCATION NOT LOCAL
ON	CB NORMALLY OPEN AUXILIARY CONTACT
OFF	CB NORMALLY CLOSED AUXILIARY CONTACT
A	COMMON
T	TEST POSITION
S	SERVICE POSITION
CS	CLOSE IN SERVICE POSITION
CT	CLOSE IN TEST POSITION
LS	LOCAL SERVICE
LT	LOCAL TEST
LC	LOCAL CLOSE
LO	LOCAL OPEN
RO	REMOTE OPEN

NOTES

LABELS

WHITE LABEL WITH BLACK LETTERING WILL BE PROVIDED FOR ALL MOUNTED APPARATUS EQUIPMENT IDENTIFICATION AND FUNCTION REFERENCE LABEL WILL BE PROVIDED FOR FRONT MOUNTED EQUIPMENTS OF THE PANEL AND EQUIPMENT IDENTIFICATION LABEL WILL BE PROVIDED FOR INTERNALLY MOUNTED EQUIPMENTS

WIRING

PVC INSULATED 600V GRADE
2.5 SQ.mm. YELLOW COLOURED FOR CT CIRCUITS
2.5 SQ.mm. RE COLOURED FOR VT CIRCUITS
1.5 SQ.mm. GREY COLOURED FOR DC SUPPLY, SCADA AND CONTROL CIRCUITS
2.5 SQ.mm. BLACK COLOURED FOR AVC AND AC CIRCUITS
2.5 SQ.mm. YELLOW/GREEN COLOURED FOR EARTHING CONNECTIONS
FOLLOWING MARKERS SHALL BE PROVIDED ON FOLLOWING WIRES:
+ SIGN FOR DC + WIRE
- SIGN FOR DC - WIRE

LUGS

A. CT CIRCUITS- RING TYPE
B. OTHER CIRCUITS - SPADE TYPE

FERULLING

YELLO TUBE 3.2 mm FOR 1.5SQ mm WIRES AND 4.2 FOR 2.5 SQ mm WIRES
(AS PER 31 - TMSS-1, RE.0)

THIS DRAWING AND THE INFORMATION CONTAINED HEREIN ARE THE SOLE PROPERTY OF NATIONAL GRID SA NO REPRODUCTION IN FULL OR IN PART SHALL BE OBTAINED FROM THIS DOCUMENT WITHOUT THE WRITTEN CONSENT OF ITS OWNER.

AS-BUILT BY _____ DATE _____ | CONTRACT NO. 11131113/00 | JOB ORDER NO. S-13020

REV. NO.	DATE	DESCRIPTION
01	13 25	AS PER SEC COMMENT
00	13 06	FOR APPROVAL

DRAWN BY RIZ CHECKED BY JKR
DATE STARTED 04.02.2013 DATE COMPLETED _____
OPRG. DEPT. CTPD ENG. DEPT. AUT-PSAC

COMMON LEGEND
132/13.8KV (GT1,GT2,GT3) AVC PANEL
S/S 8709 - 132/13.8KV IN AL-KHARJ CITY
RIYADH SAUDI ARABIA

الشركة الوطنية لنقل الكهرباء
نقل الكهرباء National Grid SA

INDEX	PLANT NO.	DRAWING NUMBER	SHEET NO. SHT	SHEET NO. CONT.	REV. NO.
-	C421	CD-322936	013	014	01

NG/D2-D (2012/01)
DMS VECTOR NGD200

FOR 132kV RELAY & CONTROL, PROTN. PANELS

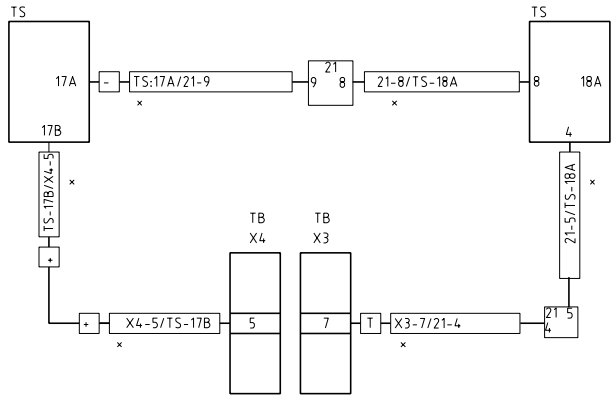

AS PER IEC-391 FIG 14a (W/O SUPPLEMENTARY/IDENTIFICATION MARK)

FOR 132kV PANELS INTERPANEL WIRING

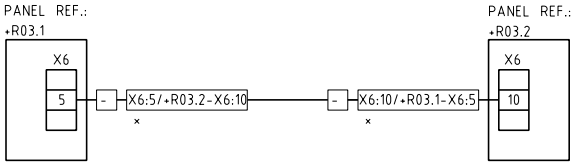

AS PER IEC-391 FIG 14d (W/O SUPPLEMENTARY/IDENTIFICATION MARK)

WIRES - PVC insulated,stranded, coaled annealed copper conductor graded for 1000V	a. CT Circuits - 2.5 Sqmm PVC Yellow colour
	b. VT Circuits - 1.5 Sqmm PVC Red colour
	c. DC, & CONTROL Circuits - 1.5 Sqmm PVC Grey colour
	d. Alarm Circuits - 1.0 Sqmm PVC Blue colour
	e. AVC & AC Circuits - 2.5 Sqmm PVC Black colour
	f. Earth Circuits - 2.5 Sqmm PVC Yellow/Green colour
LUGS - Pre-Insulated	a(CT Circuits - Ring type
	b(Other Circuits - Spade type

NOTE:1 ADDITIONAL MARKING AS APPLICABLE

NOTE:2 FERRULE NUMBERING WILL BE BLACK LETTERS ON YELLOW TUBE
3.2 mm for 1.5 sq mm wires and
4.2 mm for 2.5 sq mm wires
(As per 31-TMSS-1, REV 0)

NOTE:3 STARTING POINT OF THE FERRULE LEFT TO RIGHT

AS-BUILT BY _____ DATE _____ | CONTRACT NO. 11131113/00 | JOB ORDER NO. S-13020

REV. NO.	DATE	DESCRIPTION
01	13 25	AS PER SEC COMMENT
00	13 06	FOR APPROVAL

DRAWN BY RIZ CHECKED BY JKR
DATE STARTED 04.02.2013 DATE COMPLETED _____
OPRG. DEPT. CTPD ENG. DEPT. AUT-PSAC

FERRULE AND WIRING DETALS
132/13.8KV (GT1,GT2,GT3) AVC PANEL
S/S 8709 - 132/13.8KV IN AL-KHARJ CITY
RIYADH SAUDI ARABIA

الشركة الوطنية لنقل الكهرباء
نقل الكهرباء
National Grid SA

INDEX	PLANT NO.	DRAWING NUMBER	SHEET NO. SHT	SHEET NO. CONT.	REV. NO.
-	C421	CD-322936	014	211	01

NG/D2-D (2012/01)
DMS VECTOR NGD200

THIS DRAWING AND THE INFORMATION CONTAINED HEREIN ARE THE SOLE PROPERTY OF NATIONAL GRID SA NO REPRODUCTION IN FULL OR IN PART SHALL BE OBTAINED FROM THIS DOCUMENT WITHOUT THE WRITTEN CONSENT OF ITS OWNER.

MANUFACTURER	SCHEMATICS DWG.NO	PANEL DESCRIPITION	PANEL REFERENCE
ABB PROTECTION & SUBSTATION AUTOMATION		SS 8709 132kV RELAY PANELS	
	CD-322928	132/13.8kV GT-1 RELAY PANEL -1	+R05.1
		132/13.8kV GT-1 RELAY PANEL -2	+R05.2
	CD-322931	132/13.8kV GT-2 RELAY PANEL -1	+R01.1
		132/13.8kV GT-2 RELAY PANEL -2	+R01.2
	CD-322934	132/13.8kV GT-3 RELAY PANEL -1	+R04.1
		132/13.8kV GT-3 RELAY PANEL -2	+R04.2
	CD-322936	132/13.8kV TRANSFORMER-1,2& 3 AVC PANEL	+AVC
	CD-322922	132KV SPARE-1 UGF RELAY PANEL -1	+R07.1
		132KV SPARE-1 UGF RELAY PANEL -2	+R07.2
	CD-322916	132KV 8020 UGF RELAY PANEL -1	+R02.1
		132KV 8020 UGF RELAY PANEL -2	+R02.2
	CD-322919	132KV 8710 UGF RELAY PANEL -1	+R03.1
		132KV 8710 UGF RELAY PANEL -2	+R03.2
	CD-322925	132KV SPARE-2 UGF RELAY PANEL -1	+R06.1
		132KV SPARE-2 UGF RELAY PANEL -2	+R06.2
	CD-323012	132KV FOIP PANEL	+FOIP
	CD-322946	132kV BUS COUPLER-A	+R130
	CD-322948	132kV BUS COUPLER-B	+R230
	CD-322950	132kV BUS SECTION	+R120
	CD-322991	132kV BUSBAR PROTECTION MAIN-1 CENTRAL UNIT PANEL	+BB1-1
	CD-322993	132kV BUSBAR PROTECTION MAIN-1 BAY UNIT PANEL	+BB1-2
	CD-322995	132kV BUSBAR PROTECTION MAIN-1 BAY UNIT PANEL	+BB1-3
	CD-322997	132kV BUSBAR PROTECTION MAIN-1 BAY UNIT PANEL	+BB1-4
	CD-322999	132kV BUSBAR PROTECTION MAIN-1 BAY UNIT PANEL	+BB1-5
	CD-323001	132kV BUSBAR PROTECTION MAIN-2 CENTRAL UNIT PANEL	+BB2-1
	CD-323003	132kV BUSBAR PROTECTION MAIN-2 BAY UNIT PANEL	+BB2-2
	CD-323005	132kV BUSBAR PROTECTION MAIN-2 BAY UNIT PANEL	+BB2-3
	CD-323007	132kV BUSBAR PROTECTION MAIN-2 BAY UNIT PANEL	+BB2-4
	CD-323009	132kV BUSBAR PROTECTION MAIN-2 BAY UNIT PANEL	+BB2-5

AS-BUILT BY _____ DATE _____ | CONTRACT NO. 11131113/00 | JOB ORDER NO. S-13020

REV. NO.	DATE	DESCRIPTION
01	13 25	AS PER SEC COMMENT
00	13 06	FOR APPROVAL

DRAWN BY RIZ CHECKED BY JKR
DATE STARTED 04.02.2013 DATE COMPLETED _____
ORGG. DEPT. CTPD ENG. DEPT. AUT-PSAC

DRAWING REFERENCES
132/13.8KV (GT1,GT2,GT3) AVC PANEL
S/S 8709 - 132/13.8KV IN AL-KHARJ CITY
RIYADH SAUDI ARABIA

الشركة الوطنية لنقل الكهرباء
نقل الكهرباء
National Grid SA

INDEX	PLANT NO.	DRAWING NUMBER	SHEET NO. SHT	SHEET NO. CONT.	REV. NO.
-	C421	CD-322936	015	016	01

NG/D2-D (2012/01)
DMS | VECTOR | NGD200

THIS DRAWING AND THE INFORMATION CONTAINED HEREIN ARE THE SOLE PROPERTY OF NATIONAL GRID SA NO REPRODUCTION IN FULL OR IN PART SHALL BE OBTAINED FROM THIS DOCUMENT WITHOUT THE WRITTEN CONSENT OF ITS OWNER.

MANUFACTURER	SCHEMATICS DWG.NO	PANEL DESCRIPITION	PANEL REFERENCE
ABB PROTECTION & SUBSTATION AUTOMATION		SS 8709 13.8KV RELAY PANELS	
	CD-322952	13.8KV Capacitor Bank-1 Protection Panel	+CBP-1
	CD-322954	13.8KV Capacitor Bank-2 Protection Panel	+CBP-2
	CD-322956	13.8KV Capacitor Bank-2 Protection Panel	+CBP-3
	CD-322958	13.8 KV ACCS PANEL	+ACCS
	CD-322962	13.8KV ACSE PANEL	+ACSE
	CD-322968	13.8KV Under Voltage Load Shedding Panel	+UVLS
	CD-322964	13.8KV Under Frequency Load Shedding Panel-1	+UFLS01
	CD-322966	13.8KV Under Frequency Load Shedding Panel-2	+UFLS02

AS-BUILT BY _____ DATE _____ | CONTRACT NO. 11131113/00 | JOB ORDER NO. S-13020

REV. NO.	DATE	DESCRIPTION
01	13 25	AS PER SEC COMMENT
00	13 06	FOR APPROVAL

DRAWN BY RIZ CHECKED BY JKR
DATE STARTED 04.02.2013 DATE COMPLETED _____
ORGG. DEPT. CTPD ENG. DEPT. AUT-PSAC

DRAWING REFERENCES
132/13.8KV (GT1,GT2,GT3) AVC PANEL
S/S 8709 - 132/13.8KV IN AL-KHARJ CITY
RIYADH SAUDI ARABIA

الشركة الوطنية لنقل الكهرباء
نقل الكهرباء
National Grid SA

INDEX	PLANT NO.	DRAWING NUMBER	SHEET NO. SHT	SHEET NO. CONT.	REV. NO.
-	C421	CD-322936	016	211	01

NG/D2-D (2012/01)
DMS | VECTOR | NGD200

THIS DRAWING AND THE INFORMATION CONTAINED HEREIN ARE THE SOLE PROPERTY OF NATIONAL GRID SA NO REPRODUCTION IN FULL OR IN PART SHALL BE OBTAINED FROM THIS DOCUMENT WITHOUT THE WRITTEN CONSENT OF ITS OWNER.

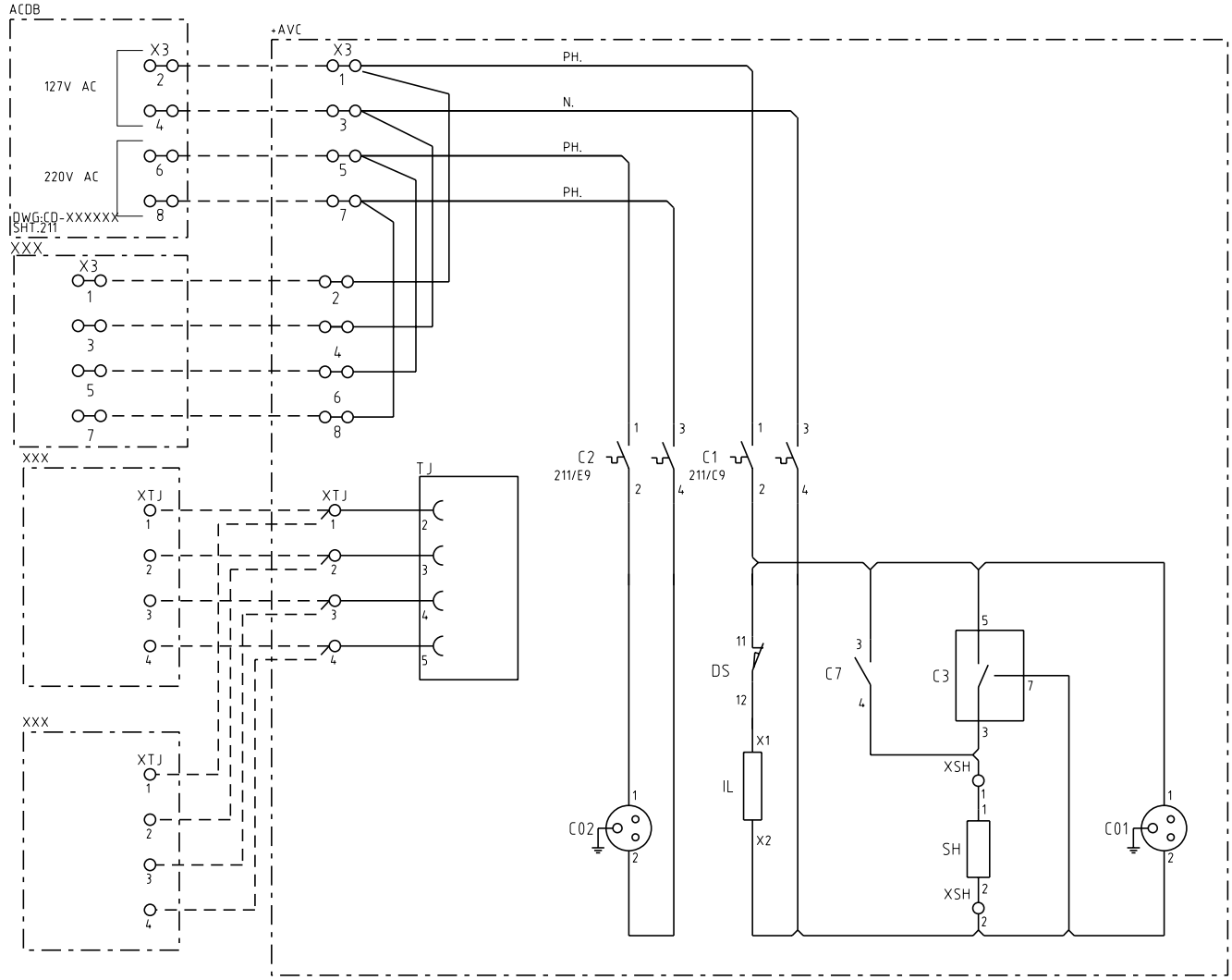

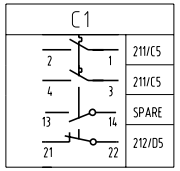

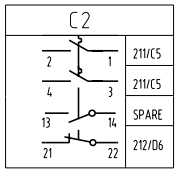

AS-BUILT BY _____ DATE _____ | CONTRACT NO. 11131113/00 | JOB ORDER NO. S-13020

REV. NO.	DATE	DESCRIPTION
01	13 25	AS PER SEC COMMENT
00	13 06	FOR APPROVAL

DRAWN BY RIZ CHECKED BY JKR
DATE STARTED 04.02.2013 DATE COMPLETED _____
ORGN. DEPT. CTPD ENG. DEPT. AUT-PSAC

AC SUPPLY FOR ILLUMINATION &POWER SOCKET
132/13.8KV (GT1,GT2,GT3) AVC PANEL
S/S 8709 - 132/13.8KV IN AL-KHARJ CITY
RIYADH SAUDI ARABIA

الشركة الوطنية لنقل الكهرباء
نقل الكهرباء
National Grid SA

INDEX	PLANT NO.	DRAWING NUMBER	SHEET NO. SHT	SHEET NO. CONT.	REV. NO.
-	C421	CD-322936	211	212	01

NG/D2-D (2012/01)
DMS | VECTOR | NGD200

THIS DRAWING AND THE INFORMATION CONTAINED HEREIN ARE THE SOLE PROPERTY OF NATIONAL GRID SA NO REPRODUCTION IN FULL OR IN PART SHALL BE OBTAINED FROM THIS DOCUMENT WITHOUT THE WRITTEN CONSENT OF ITS OWNER.

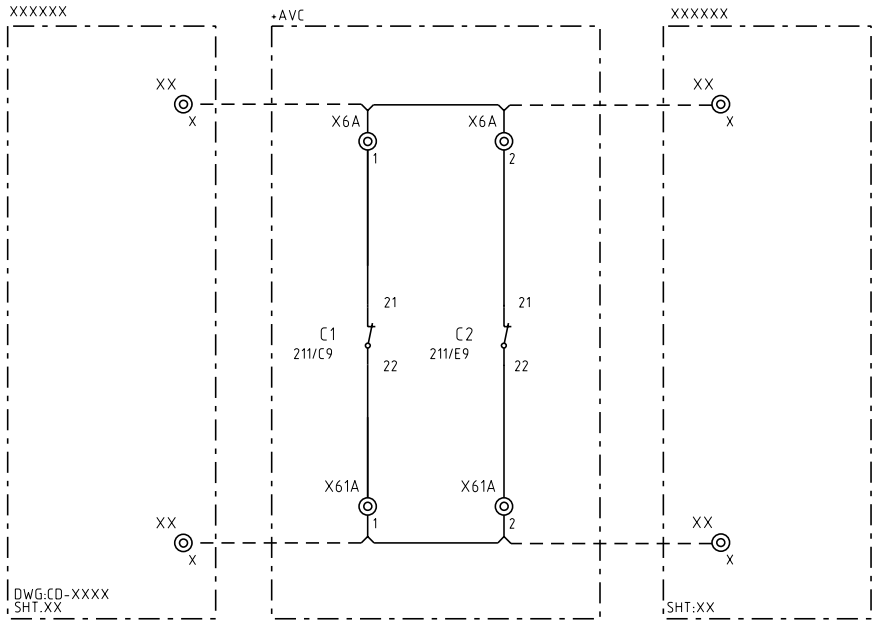

AS-BUILT BY _____ DATE _____	CONTRACT NO. 11131113/00	JOB ORDER NO. S-13020

REV. NO.	DATE	DESCRIPTION
01	13 25	AS PER SEC COMMENT
00	13 06	FOR APPROVAL

DRAWN BY RIZ CHECKED BY JKR
DATE STARTED 04.02.2013 DATE COMPLETED _____
OPRG. DEPT. CTPD ENG. DEPT. AUT-PSAC

CUB. LIGHTING, HEATER & SOCKET ALARM CKT.
132/13.8KV (GT1,GT2,GT3) AVC PANEL
S/S 8709 - 132/13.8KV IN AL-KHARJ CITY
RIYADH SAUDI ARABIA

الشركة الوطنية لنقل الكهرباء
نقل الكهرباء
National Grid SA

INDEX	PLANT NO.	DRAWING NUMBER	SHEET NO. SHT	SHEET NO. CONT.	REV. NO.
-	C421	CD-322936	212	216	01

NG/D2-D (2012/01)
DMS VECTOR NGD200

THIS DRAWING AND THE INFORMATION CONTAINED HEREIN ARE THE SOLE PROPERTY OF NATIONAL GRID SA NO REPRODUCTION IN FULL OR IN PART SHALL BE OBTAINED FROM THIS DOCUMENT WITHOUT THE WRITTEN CONSENT OF ITS OWNER.

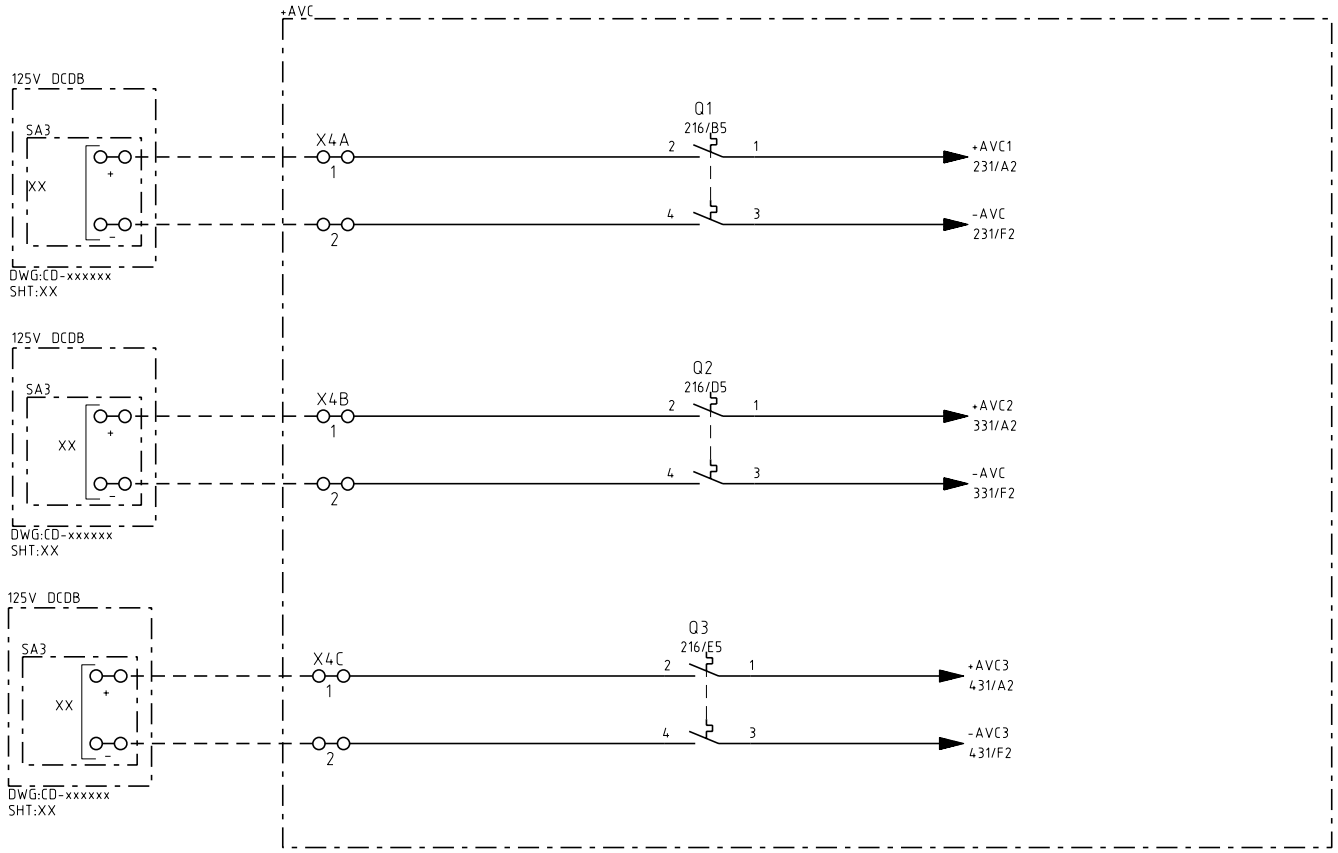

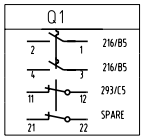

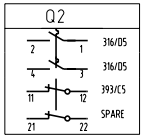

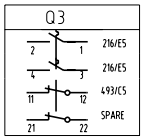

REV. NO.	DATE	DESCRIPTION
01	13 25	AS PER SEC COMMENT
00	13 06	FOR APPROVAL

AS-BUILT BY _____ DATE _____ | CONTRACT NO. 11131113/00 | JOB ORDER NO. S-13020

DRAWN BY RIZ CHECKED BY JKR
DATE STARTED 04.02.2013 DATE COMPLETED _____
OPRG. DEPT. CTPD ENG. DEPT. AUT-PSAC

DC SUPPLY DISTRIBUTION
132/13.8KV (GT1,GT2,GT3) AVC PANEL
S/S 8709 - 132/13.8KV IN AL-KHARJ CITY
RIYADH SAUDI ARABIA

الشركة الوطنية لنقل الكهرباء
نقل الكهرباء
National Grid SA

INDEX	PLANT NO.	DRAWING NUMBER	SHEET NO. SHT	SHEET NO. CONT.	REV. NO.
-	C421	CD-322936	216	221	01

NG/D2-D (2012/01)
DMS | VECTOR | NGD200

THIS DRAWING AND THE INFORMATION CONTAINED HEREIN ARE THE SOLE PROPERTY OF NATIONAL GRID SA NO REPRODUCTION IN FULL OR IN PART SHALL BE OBTAINED FROM THIS DOCUMENT WITHOUT THE WRITTEN CONSENT OF ITS OWNER.

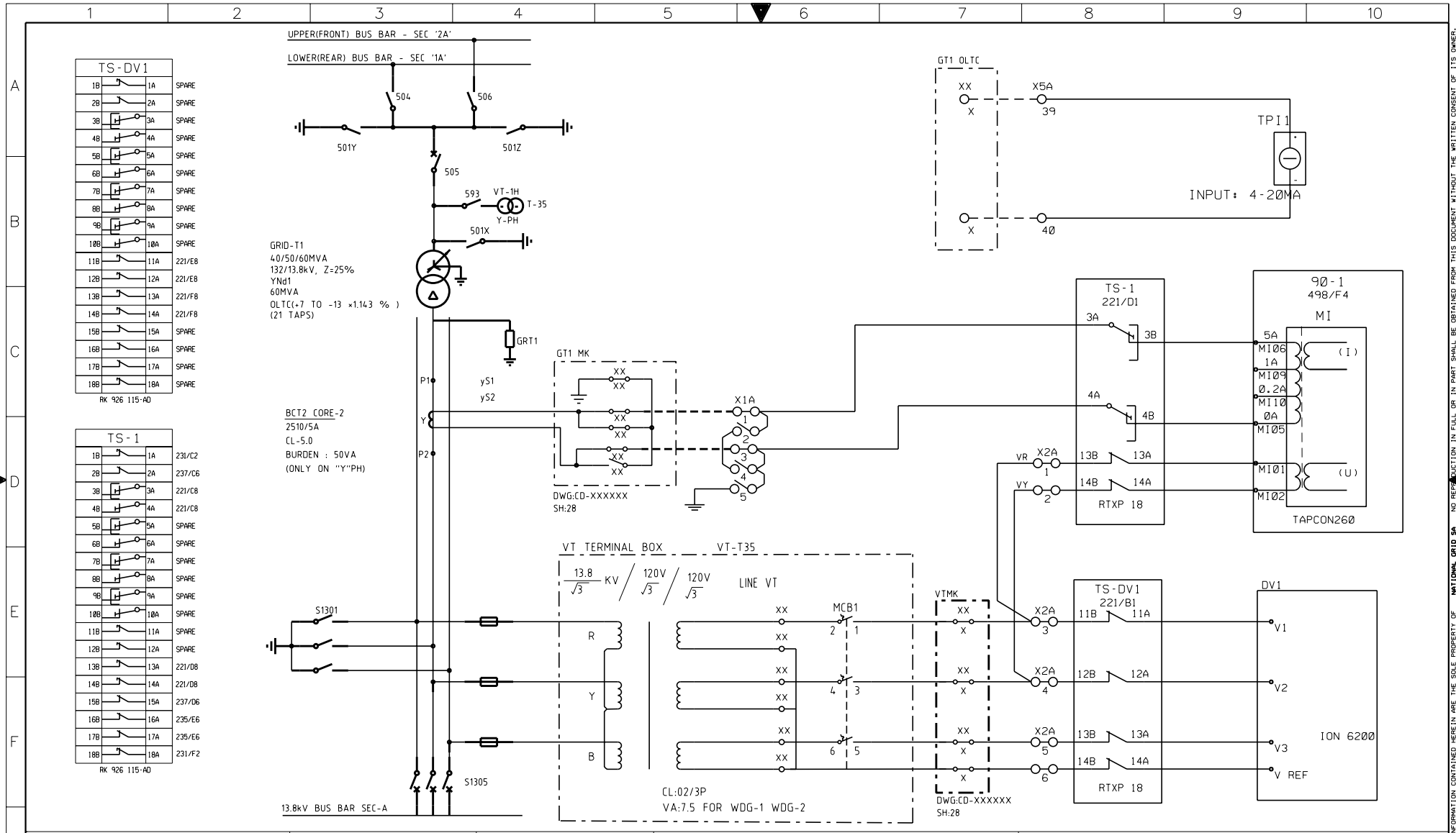

AS-BUILT BY _____ DATE _____	CONTRACT NO. 11131113/00	JOB ORDER NO. S-13020

REV. NO.	DATE	DESCRIPTION
01	13 25	AS PER SEC COMMENT
00	13 06	FOR APPROVAL

DRAWN BY RIZ CHECKED BY JKR
DATE STARTED 04.02.2013 DATE COMPLETED _____
OPRG. DEPT. CTPD ENG. DEPT. AUT-PSAC

CT/VT CIRCUITS GT1

132/13.8KV (GT1,GT2,GT3) AVC PANEL

S/S 8709 - 132/13.8KV IN AL-KHARJ CITY

RIYADH SAUDI ARABIA

الشركة الوطنية لنقل الكهرباء
National Grid SA

INDEX	PLANT NO.	DRAWING NUMBER	SHEET NO. SHT	SHEET NO. CONT.	REV. NO.
-	C421	CD-322936	221	222	01

NG/D2-D (2012/01)
DMS VECTOR NGD200

THIS DRAWING AND THE INFORMATION CONTAINED HEREIN ARE THE SOLE PROPERTY OF NATIONAL GRID SA NO REPRODUCTION IN FULL OR IN PART SHALL BE OBTAINED FROM THIS DOCUMENT WITHOUT THE WRITTEN CONSENT OF ITS OWNER.

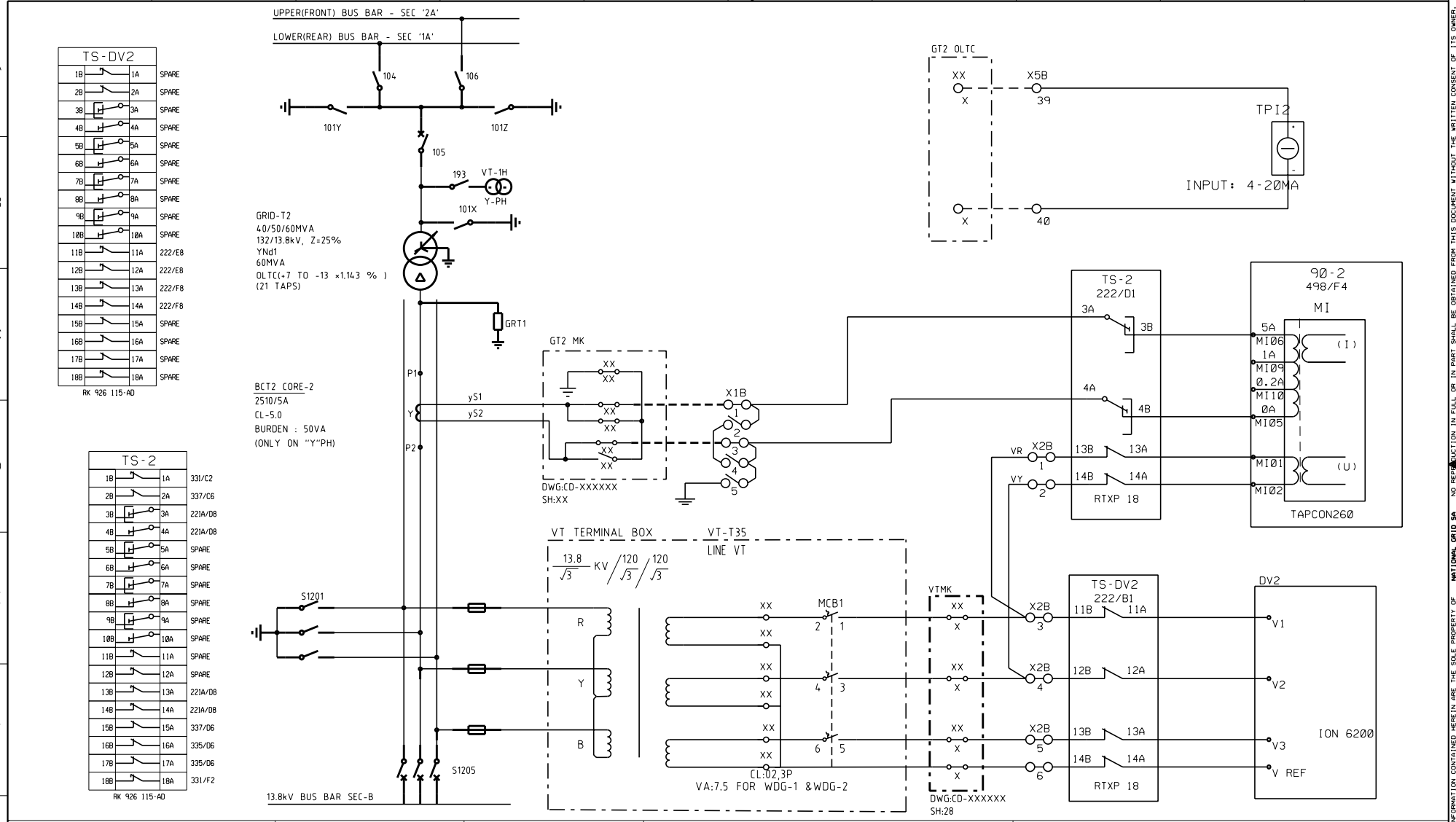

AS-BUILT BY _____ DATE _____	CONTRACT NO. 11131113/00	JOB ORDER NO. S-13020

REV. NO.	DATE	DESCRIPTION
01	13 25	AS PER SEC COMMENT
00	13 06	FOR APPROVAL

DRAWN BY RIZ CHECKED BY JKR
DATE STARTED 04.02.2013 DATE COMPLETED _____
OPRG. DEPT. CTPD ENG. DEPT. AUT-PSAC

CT/VT CIRCUITS GT2
132/13.8KV (GT1,GT2,GT3) AVC PANEL
S/S 8709 - 132/13.8KV IN AL-KHARJ CITY
RIYADH SAUDI ARABIA

الشركة الوطنية لنقل الكهرباء
نقل الكهرباء
National Grid SA

INDEX	PLANT NO.	DRAWING NUMBER	SHEET NO. SHT	SHEET NO. CONT.	REV. NO.
-	C421	CD-322936	222	223	01

NG/D2-D (2012/01)
DMS VECTOR NGD200

THIS DRAWING AND THE INFORMATION CONTAINED HEREIN ARE THE SOLE PROPERTY OF NATIONAL GRID SA NO REPRODUCTION IN FULL OR IN PART SHALL BE OBTAINED FROM THIS DOCUMENT WITHOUT THE WRITTEN CONSENT OF ITS OWNER.

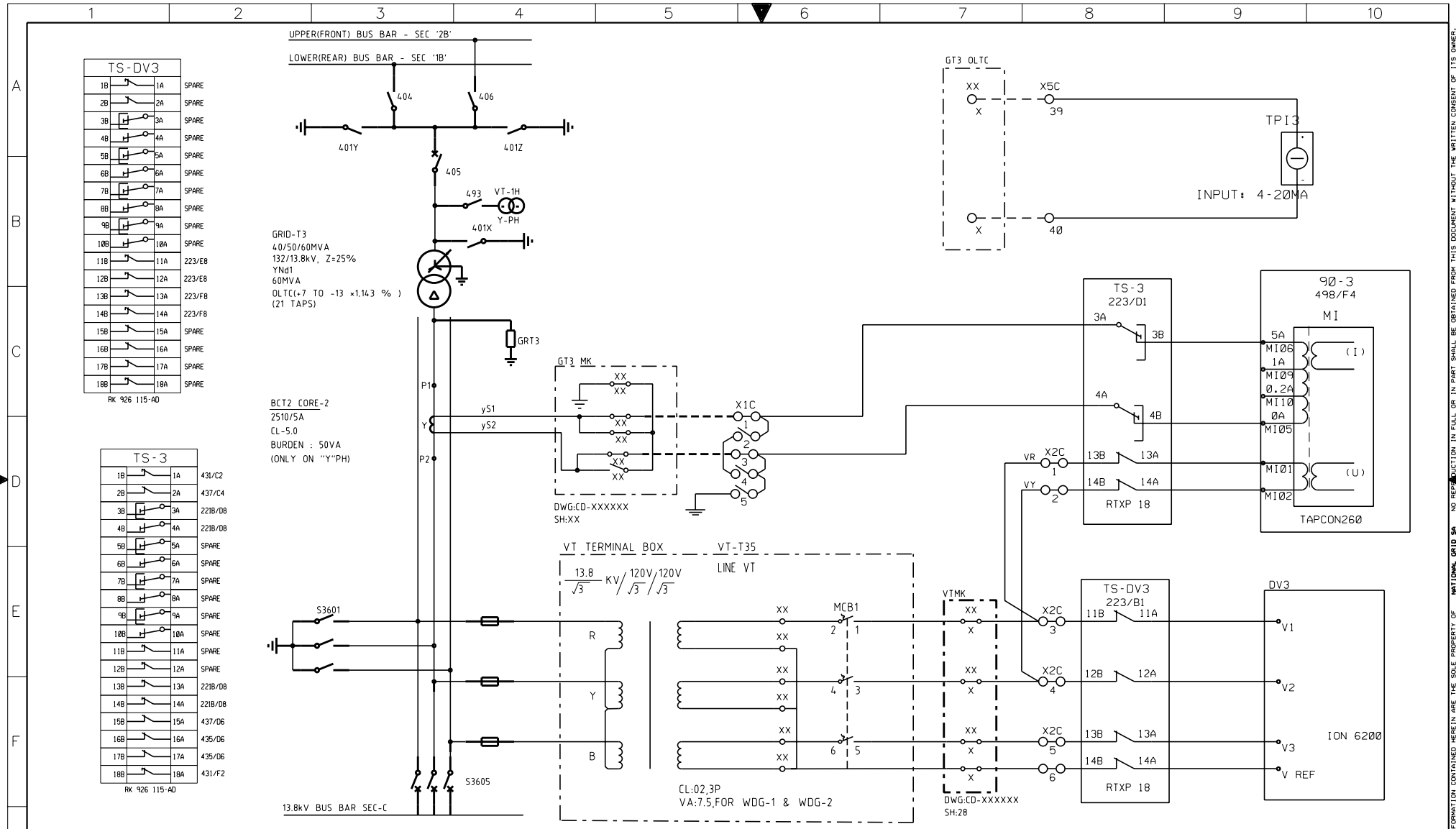

AS-BUILT BY _____ DATE _____	CONTRACT NO. 11131113/00	JOB ORDER NO. S-13020

REV. NO.	DATE	DESCRIPTION
01	13 25	AS PER SEC COMMENT
00	13 06	FOR APPROVAL

DRAWN BY RIZ CHECKED BY JKR
DATE STARTED 04.02.2013 DATE COMPLETED _____
OPRG. DEPT. CTPD ENG. DEPT. AUT-PSAC

CT/VT CIRCUITS GT3

132/13.8KV (GT1,GT2,GT3) AVC PANEL

S/S 8709 - 132/13.8KV IN AL-KHARJ CITY

RIYADH SAUDI ARABIA

الشركة الوطنية لنقل الكهرباء
نقل الكهرباء
National Grid SA

INDEX	PLANT NO.	DRAWING NUMBER	SHEET NO. SHT	SHEET NO. CONT.	REV. NO.
-	C421	CD-322936	223	231	01

NG/D2-D (2012/01)
DMS VECTOR NGD200

THIS DRAWING AND THE INFORMATION CONTAINED HEREIN ARE THE SOLE PROPERTY OF NATIONAL GRID SA NO REPRODUCTION IN FULL OR IN PART SHALL BE OBTAINED FROM THIS DOCUMENT WITHOUT THE WRITTEN CONSENT OF ITS OWNER.

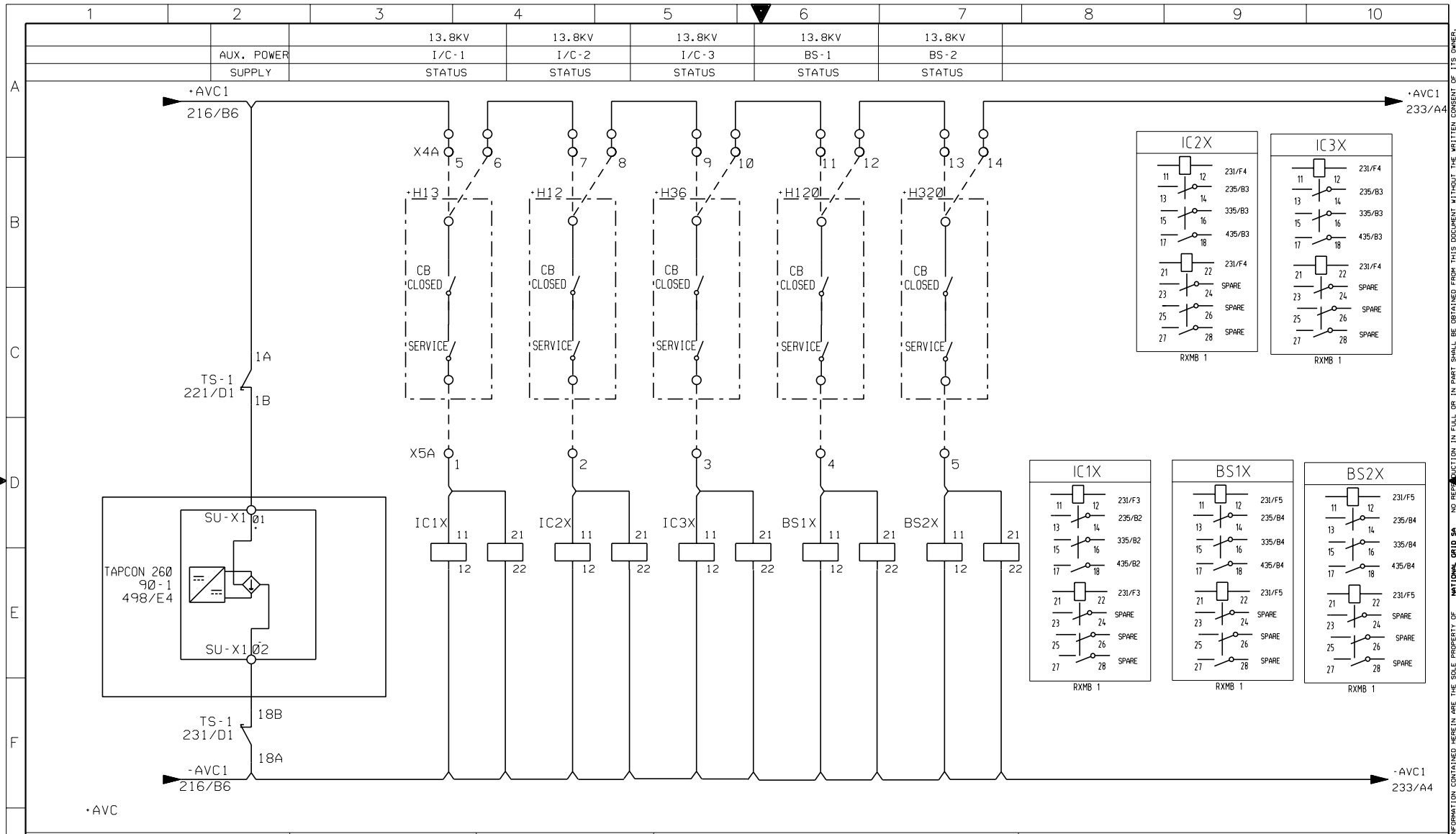

AS-BUILT BY _____ DATE _____	CONTRACT NO. 11131113/00	JOB ORDER NO. S-13020

REV. NO.	DATE	DESCRIPTION
01	13 25	AS PER SEC COMMENT
00	13 06	FOR APPROVAL

DRAWN BY RIZ CHECKED BY JKR
DATE STARTED 04.02.2013 DATE COMPLETED
OPRG. DEPT. CTPD ENG. DEPT. AUT-PSAC

BINARY INPUTS-GT1

132/13.8KV (GT1,GT2,GT3) AVC PANEL

S/S 8709 - 132/13.8KV IN AL-KHARJ CITY

RIYADH SAUDI ARABIA

الشركة الوطنية لنقل الكهرباء
نقل الكهرباء
National Grid SA

INDEX	PLANT NO.	DRAWING NUMBER	SHEET NO. SHT	SHEET NO. CONT.	REV. NO.
-	C421	CD-322936	231	233	01

NG/D2-D (2012/01)

DMS VECTOR NGD200

THIS DRAWING AND THE INFORMATION CONTAINED HEREIN ARE THE SOLE PROPERTY OF NATIONAL GRID SA NO REPRODUCTION IN FULL OR IN PART SHALL BE OBTAINED FROM THIS DOCUMENT WITHOUT THE WRITTEN CONSENT OF ITS OWNER.

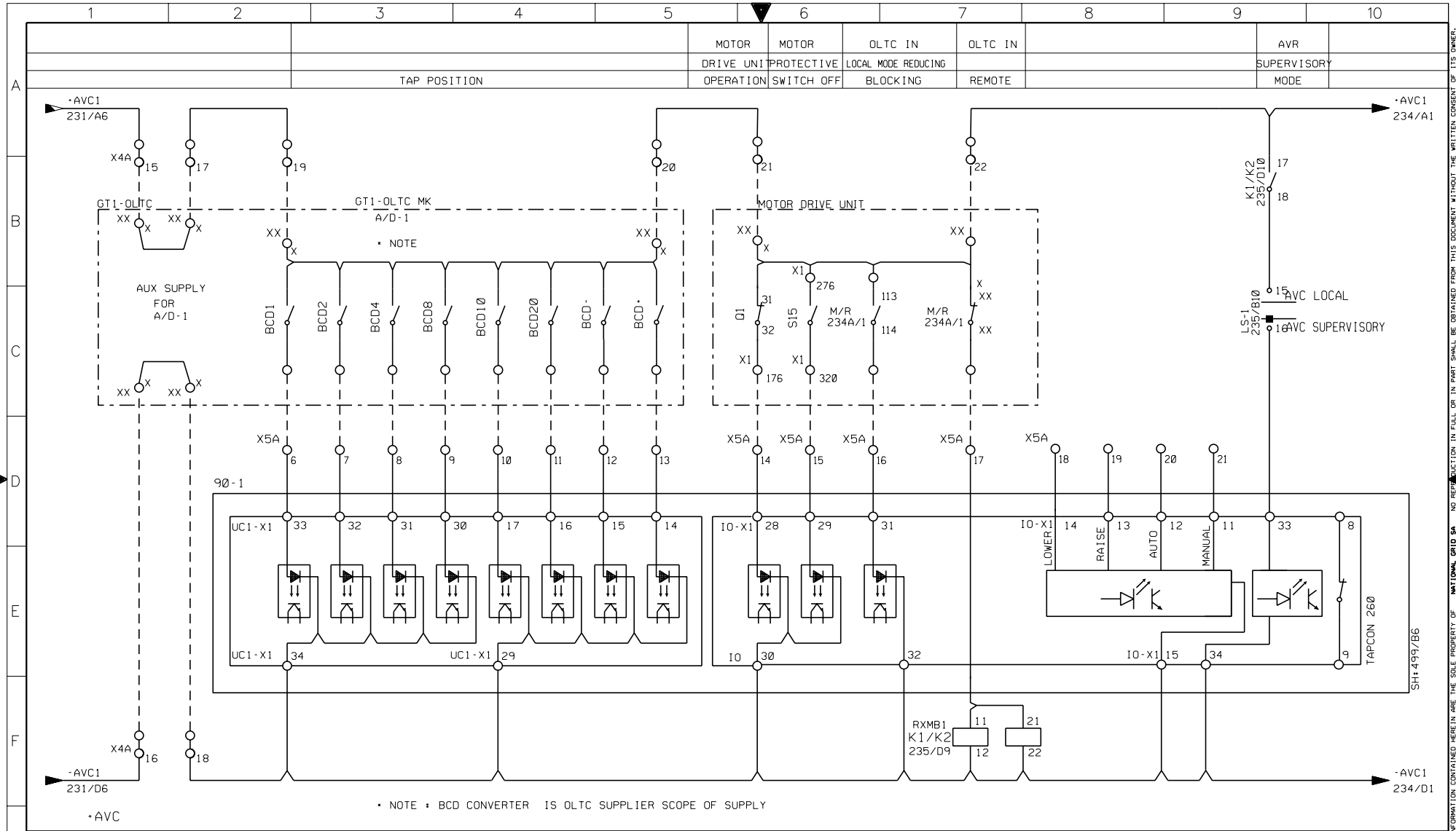

AS-BUILT BY _____ DATE _____	CONTRACT NO. 11131113/00	JOB ORDER NO. S-13020	BINARY INPUTS-GT1	الشركة الوطنية لنقل الكهرباء	نقل الكهرباء National Grid SA
01 / 13 25 / AS PER SEC COMMENT	DRAWN BY RIZ	CHECKED BY JKR	132/13.8KV (GT1,GT2,GT3) AVC PANEL		
00 / 13 06 / FOR APPROVAL	DATE STARTED 04.02.2013	DATE COMPLETED _____	S/S 8709 - 132/13.8KV IN AL-KHARJ CITY		
REV. NO. / DATE / DESCRIPTION	OPRG. DEPT. CTPD	ENG. DEPT. AUT-PSAC	RIYADH SAUDI ARABIA		

INDEX	PLANT NO.	DRAWING NUMBER	SHEET NO. SHT	SHEET NO. CONT.	REV. NO.
-	C421	CD-322936	233	234	01

NG/D2-D (2012/01)

DMS | VECTOR | NGD200

THIS DRAWING AND THE INFORMATION CONTAINED HEREIN ARE THE SOLE PROPERTY OF NATIONAL GRID SA NO REPRODUCTION IN FULL OR IN PART SHALL BE OBTAINED FROM THIS DOCUMENT WITHOUT THE WRITTEN CONSENT OF ITS OWNER.

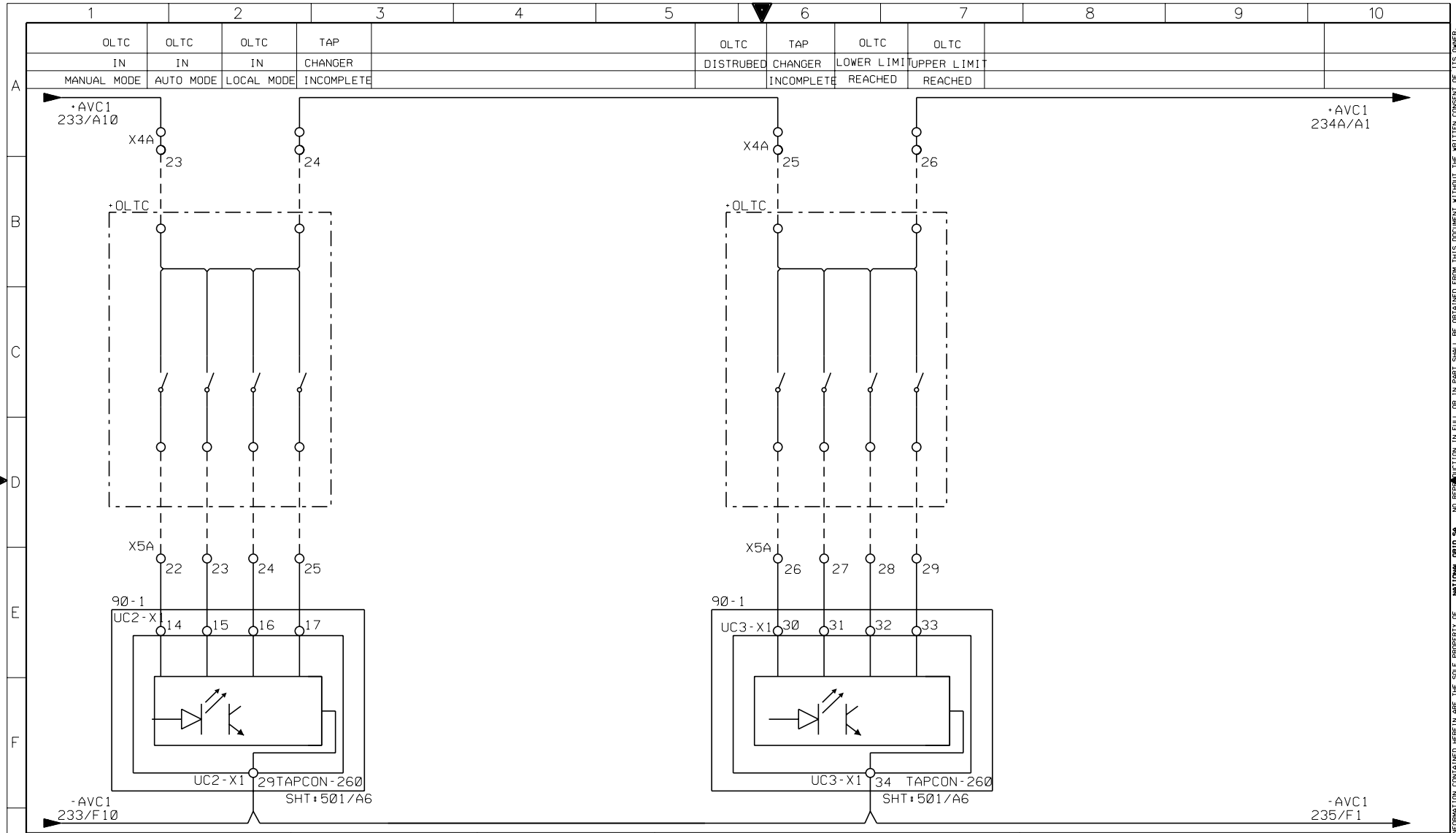

AS-BUILT BY _____ DATE _____	CONTRACT NO. 11131113/00	JOB ORDER NO. S-13020

REV. NO.	DATE	DESCRIPTION
01	13 25	AS PER SEC COMMENT
00	13 06	FOR APPROVAL

DRAWN BY RIZ CHECKED BY JKR
DATE STARTED 04.02.2013 DATE COMPLETED _____
OPRG. DEPT. CTPD ENG. DEPT. AUT-PSAC

BINARY INPUTS-GT1
132/13.8KV (GT1,GT2,GT3) AVC PANEL
S/S 8709 - 132/13.8KV IN AL-KHARJ CITY
RIYADH SAUDI ARABIA

الشركة الوطنية لنقل الكهرباء
نقل الكهرباء
National Grid SA

INDEX	PLANT NO.	DRAWING NUMBER	SHEET NO. SHT	SHEET NO. CONT.	REV. NO.
-	C421	CD-322936	234	235	01

NG/D2-D (2012/01)
DMS VECTOR NGD200

THIS DRAWING AND THE INFORMATION CONTAINED HEREIN ARE THE SOLE PROPERTY OF NATIONAL GRID SA NO REPRODUCTION IN FULL OR IN PART SHALL BE OBTAINED FROM THIS DOCUMENT WITHOUT THE WRITTEN CONSENT OF ITS OWNER.

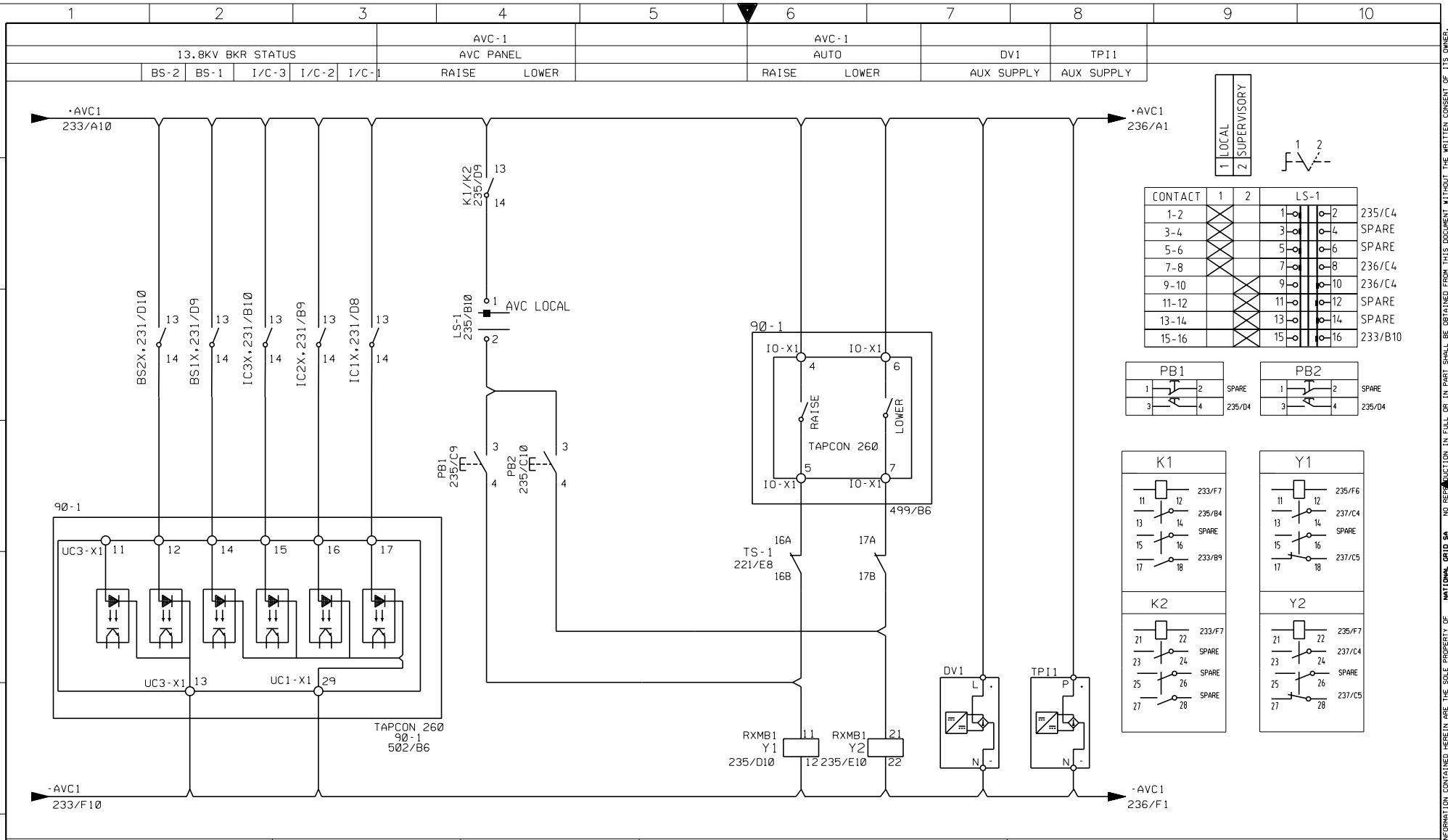

AS-BUILT BY _____ DATE _____	CONTRACT NO. 11131113/00	JOB ORDER NO. S-13020

REV. NO.	DATE	DESCRIPTION
01	13 25	AS PER SEC COMMENT
00	13 06	FOR APPROVAL

DRAWN BY RIZ CHECKED BY JKR
DATE STARTED 04.02.2013 DATE COMPLETED _____
OPRG. DEPT. CTPD ENG. DEPT. AUT-PSAC

TAP CHANGER RAISE/LOWER CIRCUITS
132/13.8KV (GT1,GT2,GT3) AVC PANEL
S/S 8709 - 132/13.8KV IN AL-KHARJ CITY
RIYADH SAUDI ARABIA

الشركة الوطنية لنقل الكهرباء
نقل الكهرباء
National Grid SA

INDEX	PLANT NO.	DRAWING NUMBER	SHEET NO. SHT	SHEET NO. CONT.	REV. NO.
-	C421	CD-322936	235	236	01

NG/D2-D (2012/01)
DMS VECTOR NGD200

THIS DRAWING AND THE INFORMATION CONTAINED HEREIN ARE THE SOLE PROPERTY OF NATIONAL GRID SA NO REPRODUCTION IN FULL OR IN PART SHALL BE OBTAINED FROM THIS DOCUMENT WITHOUT THE WRITTEN CONSENT OF ITS OWNER.

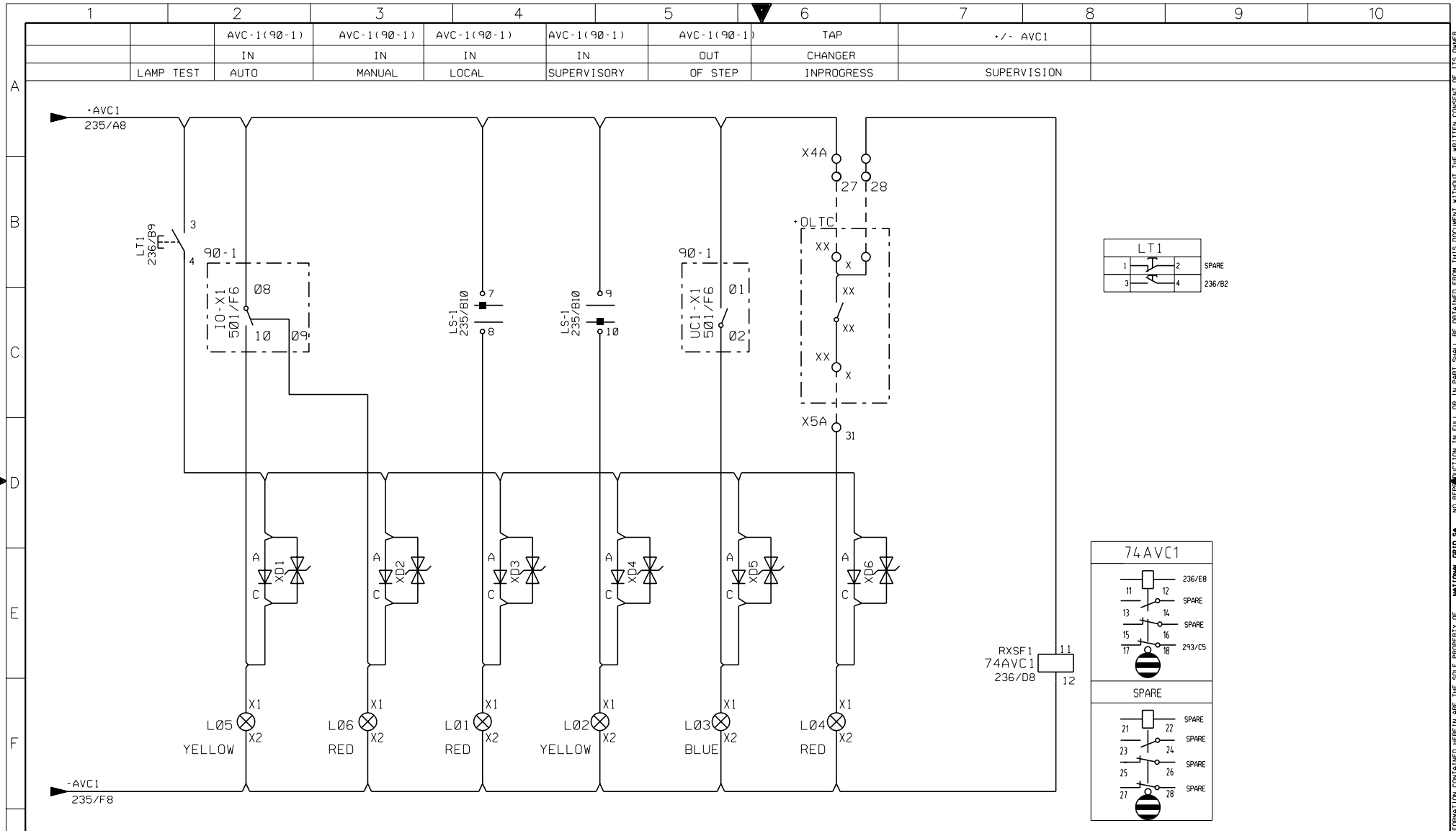

AS-BUILT BY _____ DATE _____	CONTRACT NO. 11131113/00	JOB ORDER NO. S-13020

REV. NO.	DATE	DESCRIPTION
01	13 25	AS PER SEC COMMENT
00	13 06	FOR APPROVAL

DRAWN BY RIZ CHECKED BY JKR
DATE STARTED 04.02.2013 DATE COMPLETED
OPRG. DEPT. CTPD ENG. DEPT. AUT-PSAC

INDICATION CIRCUIT-GT1

132/13.8KV (GT1,GT2,GT3) AVC PANEL

S/S 8709 - 132/13.8KV IN AL-KHARJ CITY

RIYADH SAUDI ARABIA

الشركة الوطنية لنقل الكهرباء

نقل الكهرباء National Grid SA

INDEX	PLANT NO.	DRAWING NUMBER	SHEET NO. SHT	SHEET NO. CONT.	REV. NO.
-	C421	CD-322936	236	237	01

NG/D2-D (2012/01)

DMS VECTOR NGD200

THIS DRAWING AND THE INFORMATION CONTAINED HEREIN ARE THE SOLE PROPERTY OF NATIONAL GRID SA NO REPRODUCTION IN FULL OR IN PART SHALL BE OBTAINED FROM THIS DOCUMENT WITHOUT THE WRITTEN CONSENT OF ITS OWNER.

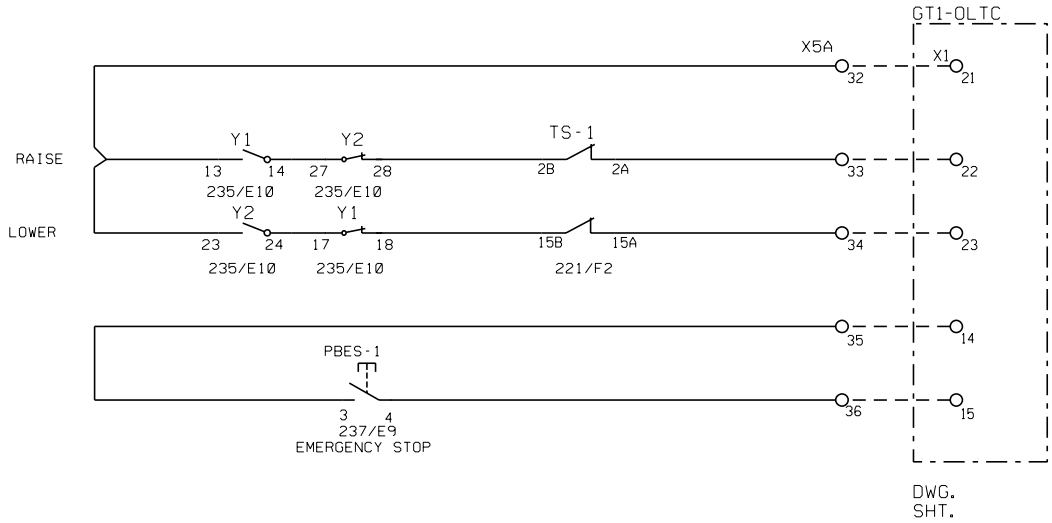

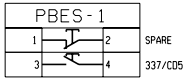

AS-BUILT BY _____ DATE _____	CONTRACT NO. 11131113/00	JOB ORDER NO. S-13020

REV. NO.	DATE	DESCRIPTION
01	13 25	AS PER SEC COMMENT
00	13 06	FOR APPROVAL

DRAWN BY RIZ CHECKED BY JKR
DATE STARTED 04.02.2013 DATE COMPLETED _____
OPRG. DEPT. CTPD ENG. DEPT. AUT-PSAC

TAP CHANGER RAISE/LOWER CIRCUITS
132/13.8KV (GT1,GT2,GT3) AVC PANEL
S/S 8709 - 132/13.8KV IN AL-KHARJ CITY
RIYADH SAUDI ARABIA

الشركة الوطنية لنقل الكهرباء
نقل الكهرباء
National Grid SA

INDEX	PLANT NO.	DRAWING NUMBER	SHEET NO. SHT	SHEET NO. CONT.	REV. NO.
-	C421	CD-322936	237	293	01

NG/D2-D (2012/01)
DMS VECTOR NGD200

THIS DRAWING AND THE INFORMATION CONTAINED HEREIN ARE THE SOLE PROPERTY OF NATIONAL GRID SA NO REPRODUCTION IN FULL OR IN PART SHALL BE OBTAINED FROM THIS DOCUMENT WITHOUT THE WRITTEN CONSENT OF ITS OWNER.

AVC-1 RELAY FAIL	DC SUPPLY-1 FAILED	PARALLEL FAILURE FAILED

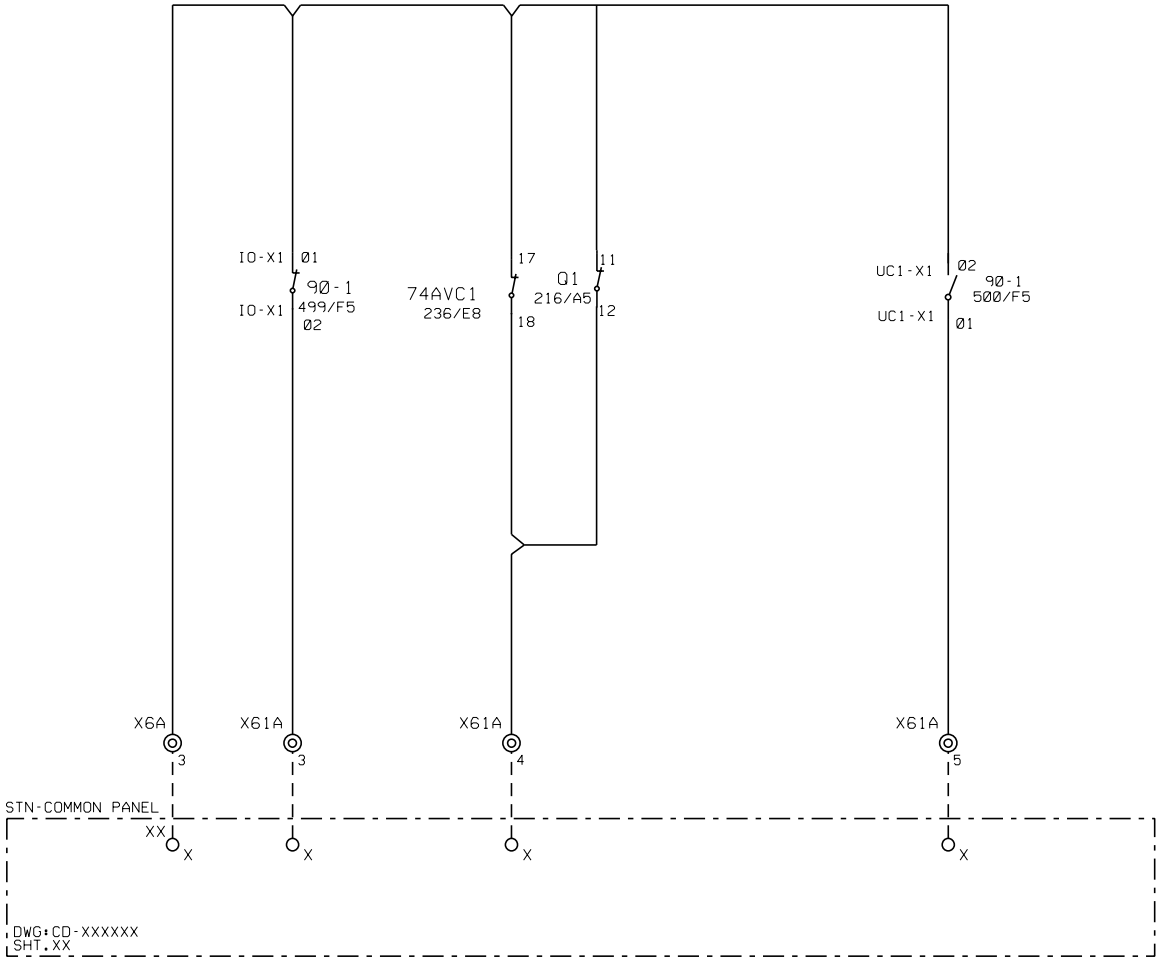

AS-BUILT BY _____ DATE _____	CONTRACT NO. 11131113/00	JOB ORDER NO. S-13020

REV. NO.	DATE	DESCRIPTION
01	13 25	AS PER SEC COMMENT
00	13 06	FOR APPROVAL

DRAWN BY RIZ CHECKED BY JKR
DATE STARTED 04.02.2013 DATE COMPLETED _____
ORGN. DEPT. CTPD ENG. DEPT. AUT-PSAC

STN-COMMON ALARM CIRCUIT
132/13.8KV (GT1,GT2,GT3) AVC PANEL
S/S 8709 - 132/13.8KV IN AL-KHARJ CITY
RIYADH SAUDI ARABIA

الشركة الوطنية لنقل الكهرباء
نقل الكهرباء
National Grid SA

INDEX	PLANT NO.	DRAWING NUMBER	SHEET NO. SHT	SHEET NO. CONT.	REV. NO.
-	C421	CD-322936	293	331	01

NG/D2-D (2012/01)
DMS VECTOR NGD200

THIS DRAWING AND THE INFORMATION CONTAINED HEREIN ARE THE SOLE PROPERTY OF NATIONAL GRID SA NO REPRODUCTION IN FULL OR IN PART SHALL BE OBTAINED FROM THIS DOCUMENT WITHOUT THE WRITTEN CONSENT OF ITS OWNER.

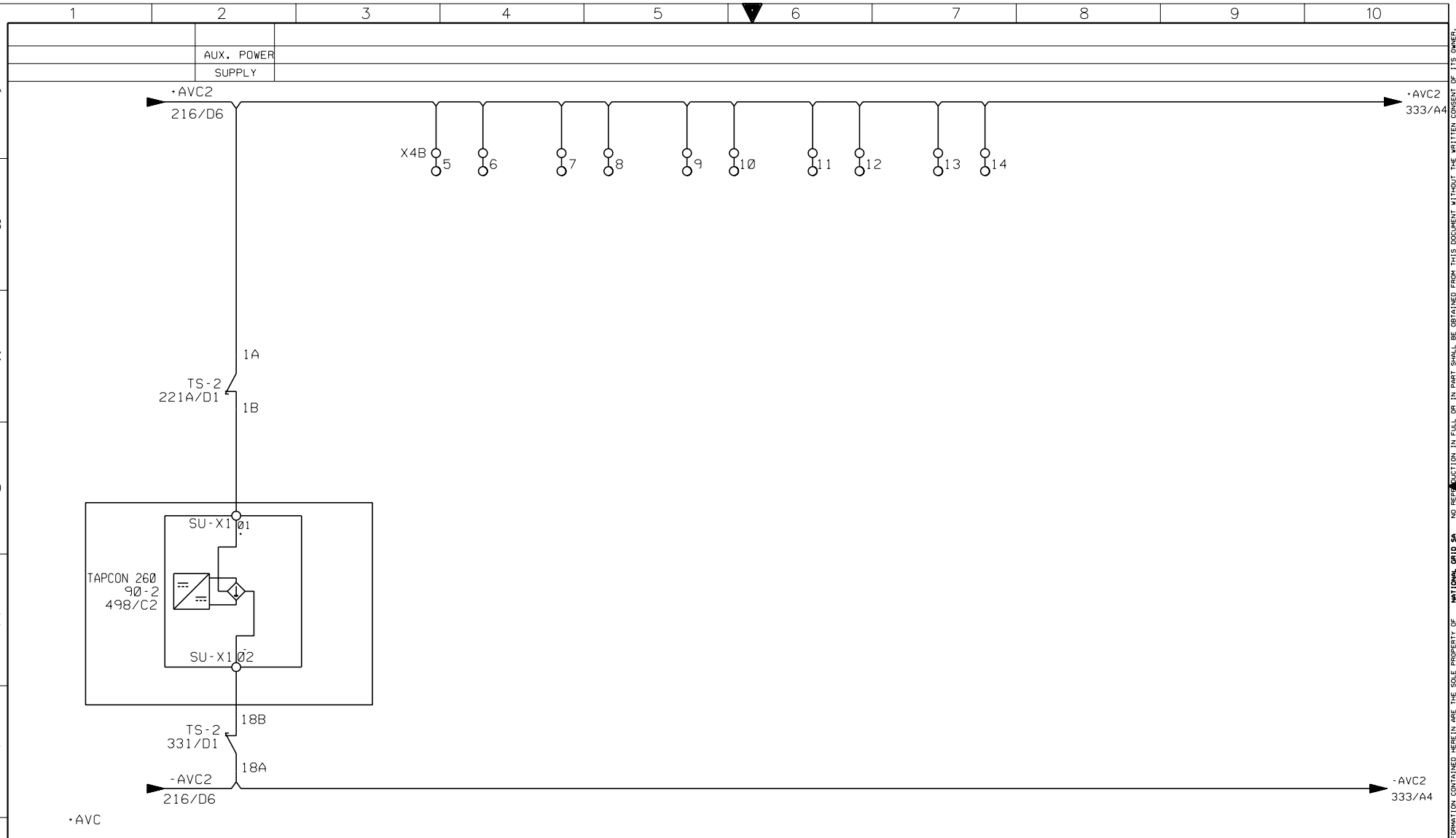

AS-BUILT BY ____ DATE ____	CONTRACT NO. 11131113/00	JOB ORDER NO. S-13020

REV. NO.	DATE	DESCRIPTION
01	13 25	AS PER SEC COMMENT
00	13 06	FOR APPROVAL

DRAWN BY RIZ CHECKED BY JKR
DATE STARTED 04.02.2013 DATE COMPLETED
ORGN. DEPT. CTPD ENG. DEPT. AUT-PSAC

BINARY INPUTS-GT2
132/13.8KV (GT1,GT2,GT3) AVC PANEL
S/S 8709 - 132/13.8KV IN AL-KHARJ CITY
RIYADH SAUDI ARABIA

الشركة الوطنية لنقل الكهرباء
نقل الكهرباء
National Grid SA

INDEX	PLANT NO.	DRAWING NUMBER	SHEET NO. SHT	SHEET NO. CONT.	REV. NO.
-	C421	CD-322936	331	333	01

NG/D2-D (2012/01)
DMS VECTOR NGD200

THIS DRAWING AND THE INFORMATION CONTAINED HEREIN ARE THE SOLE PROPERTY OF NATIONAL GRID SA NO REPRODUCTION IN FULL OR IN PART SHALL BE OBTAINED FROM THIS DOCUMENT WITHOUT THE WRITTEN CONSENT OF ITS OWNER.

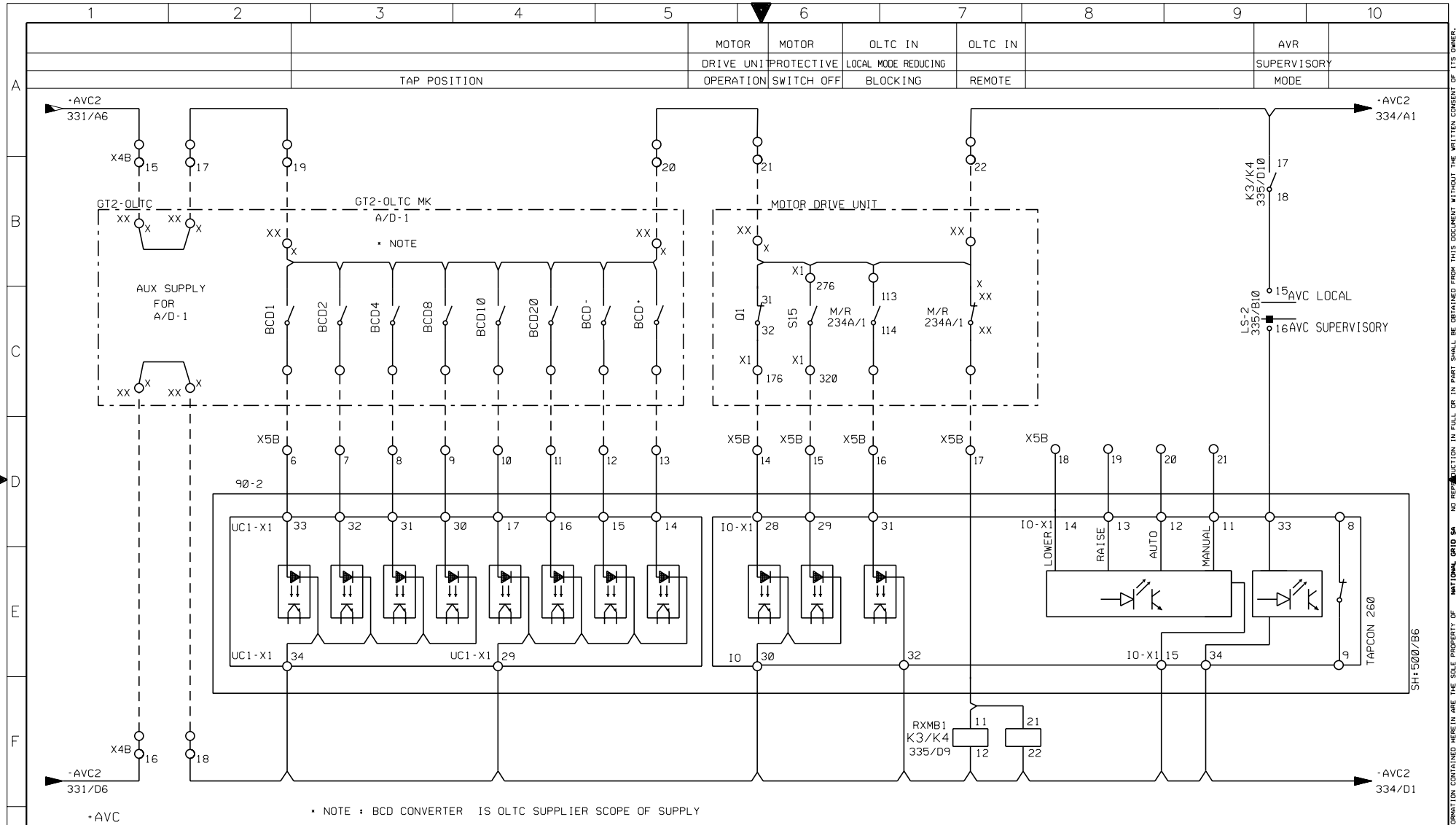

REV. NO.	DATE	DESCRIPTION
01	13 25	AS PER SEC COMMENT
00	13 06	FOR APPROVAL

AS-BUILT BY _____ DATE _____

CONTRACT NO. 11131113/00 | JOB ORDER NO. S-13020

DRAWN BY RIZ CHECKED BY JKR

DATE STARTED 04.02.2013 DATE COMPLETED _____

OPRG. DEPT. CTPD ENG. DEPT. AUT-PSAC

BINARY INPUTS-GT2

132/13.8KV (GT1,GT2,GT3) AVC PANEL

S/S 8709 - 132/13.8KV IN AL-KHARJ CITY

RIYADH SAUDI ARABIA

الشركة الوطنية لنقل الكهرباء

National Grid SA

INDEX	PLANT NO.	DRAWING NUMBER	SHEET NO. SHT	SHEET NO. CONT.	REV. NO.
-	C421	CD-322936	333	334	01

NG/D2-D (2012/01)

DMS VECTOR NGD200

THIS DRAWING AND THE INFORMATION CONTAINED HEREIN ARE THE SOLE PROPERTY OF NATIONAL GRID SA NO REPRODUCTION IN FULL OR IN PART SHALL BE OBTAINED FROM THIS DOCUMENT WITHOUT THE WRITTEN CONSENT OF ITS OWNER.

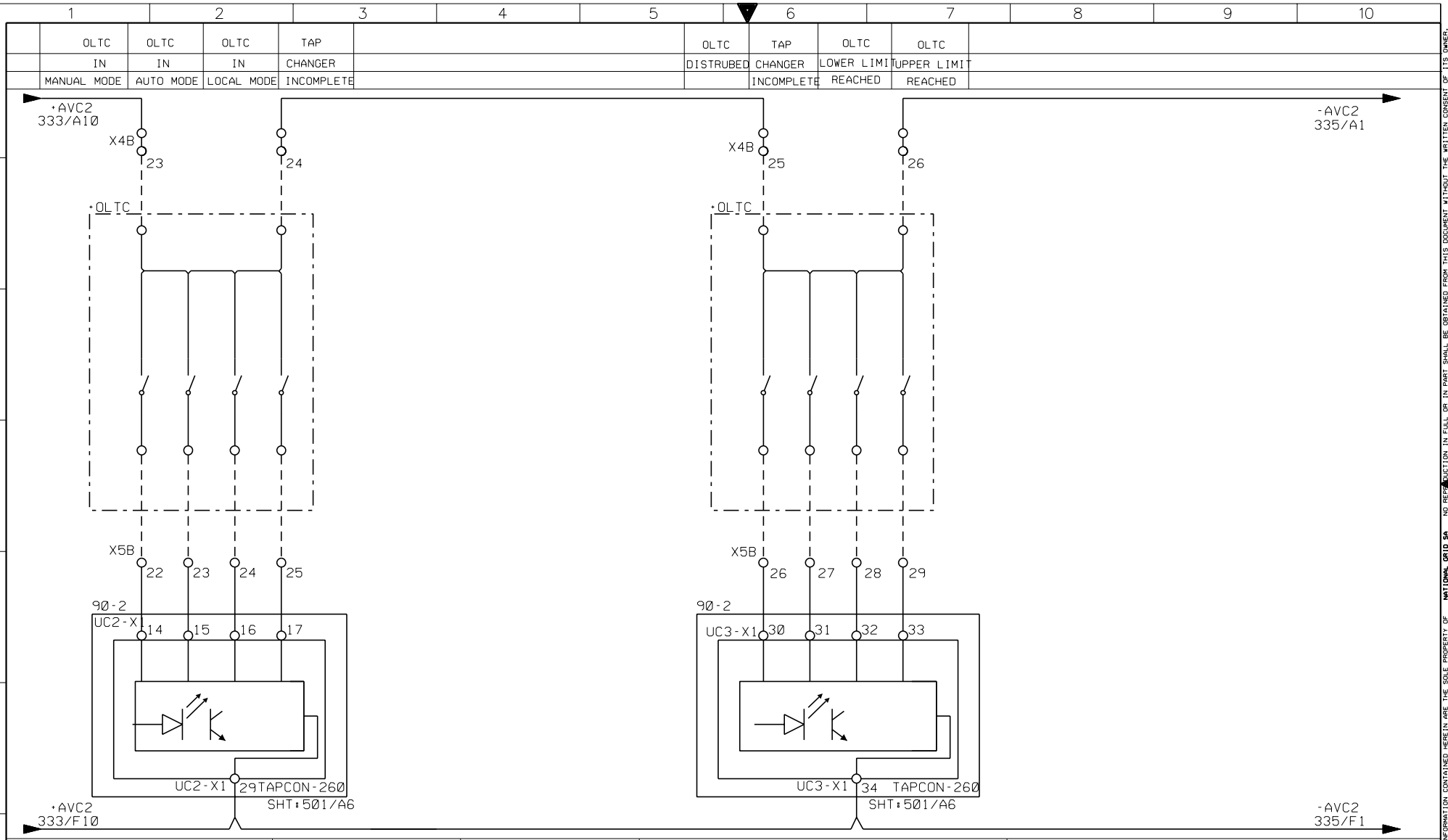

AS-BUILT BY ____ DATE ____	CONTRACT NO. 11131113/00	JOB ORDER NO. S-13020

REV. NO.	DATE	DESCRIPTION
01	13 25	AS PER SEC COMMENT
00	13 06	FOR APPROVAL

DRAWN BY RIZ CHECKED BY JKR
DATE STARTED 04.02.2013 DATE COMPLETED
OPRG. DEPT. CTPD ENG. DEPT. AUT-PSAC

BINARY INPUTS-GT2
132/13.8KV (GT1,GT2,GT3) AVC PANEL
S/S 8709 - 132/13.8KV IN AL-KHARJ CITY
RIYADH SAUDI ARABIA

الشركة الوطنية لنقل الكهرباء
نقل الكهرباء
National Grid SA

INDEX	PLANT NO.	DRAWING NUMBER	SHEET NO. SHT	SHEET NO. CONT.	REV. NO.
-	C421	CD-322936	334	335	01

NG/D2-D (2012/01)
DMS VECTOR NGD200

THIS DRAWING AND THE INFORMATION CONTAINED HEREIN ARE THE SOLE PROPERTY OF NATIONAL GRID SA NO REPRODUCTION IN FULL OR IN PART SHALL BE OBTAINED FROM THIS DOCUMENT WITHOUT THE WRITTEN CONSENT OF ITS OWNER.

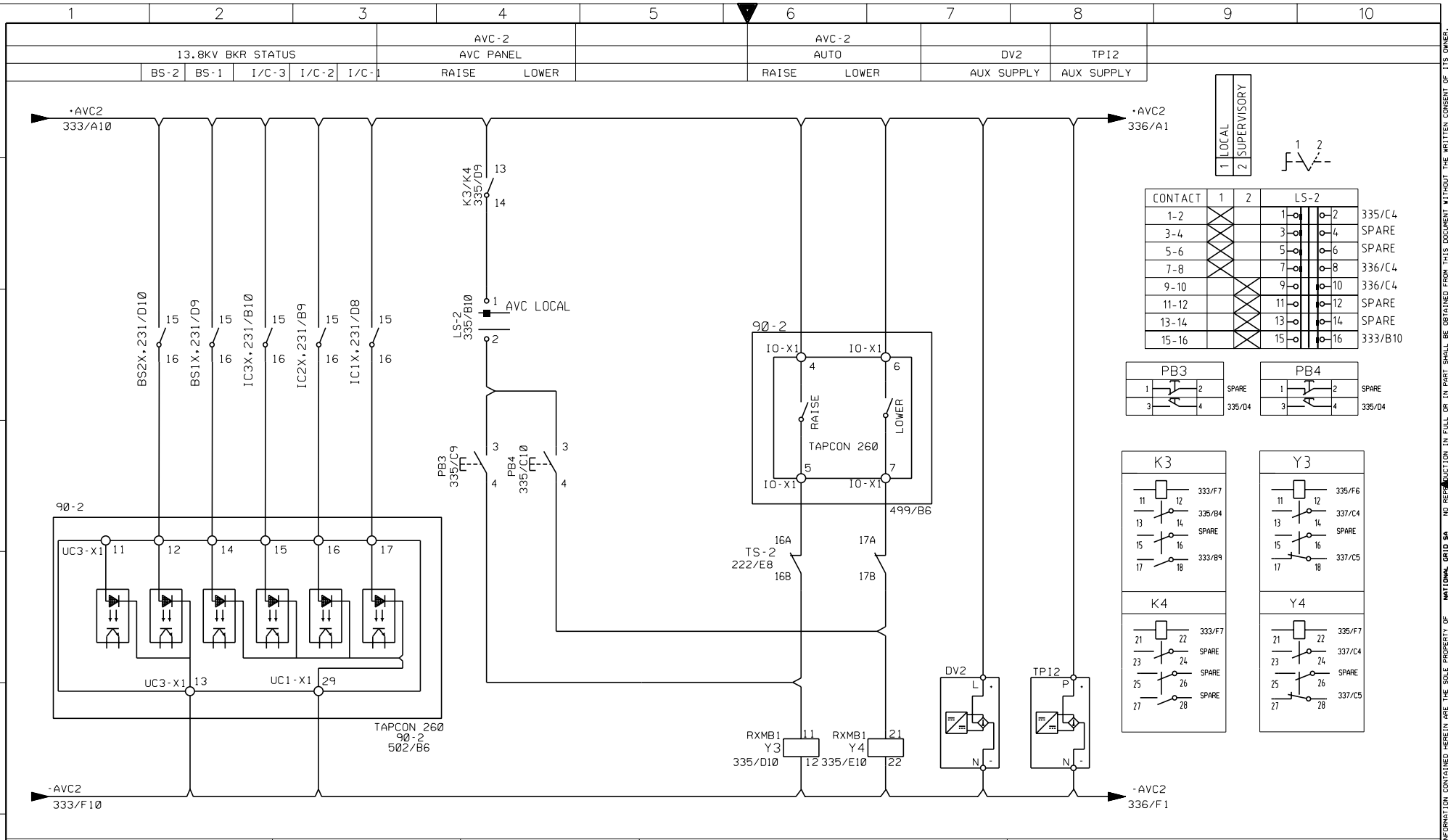

AS-BUILT BY _____ DATE _____	CONTRACT NO. 11131113/00	JOB ORDER NO. S-13020

REV. NO.	DATE	DESCRIPTION
01	13 25	AS PER SEC COMMENT
00	13 06	FOR APPROVAL

DRAWN BY RIZ CHECKED BY JKR
DATE STARTED 04.02.2013 DATE COMPLETED _____
OPRG. DEPT. CTPD ENG. DEPT. AUT-PSAC

TAP CHANGER RAISE/LOWER CIRCUITS
132/13.8KV (GT1,GT2,GT3) AVC PANEL
S/S 8709 - 132/13.8KV IN AL-KHARJ CITY
RIYADH SAUDI ARABIA

الشركة الوطنية لنقل الكهرباء
نقل الكهرباء
National Grid SA

INDEX	PLANT NO.	DRAWING NUMBER	SHEET NO. SHT	SHEET NO. CONT.	REV. NO.
-	C421	CD-322936	335	336	01

NG/D2-D (2012/01)
DMS VECTOR NGD200

THIS DRAWING AND THE INFORMATION CONTAINED HEREIN ARE THE SOLE PROPERTY OF NATIONAL GRID SA NO REPRODUCTION IN FULL OR IN PART SHALL BE OBTAINED FROM THIS DOCUMENT WITHOUT THE WRITTEN CONSENT OF ITS OWNER.

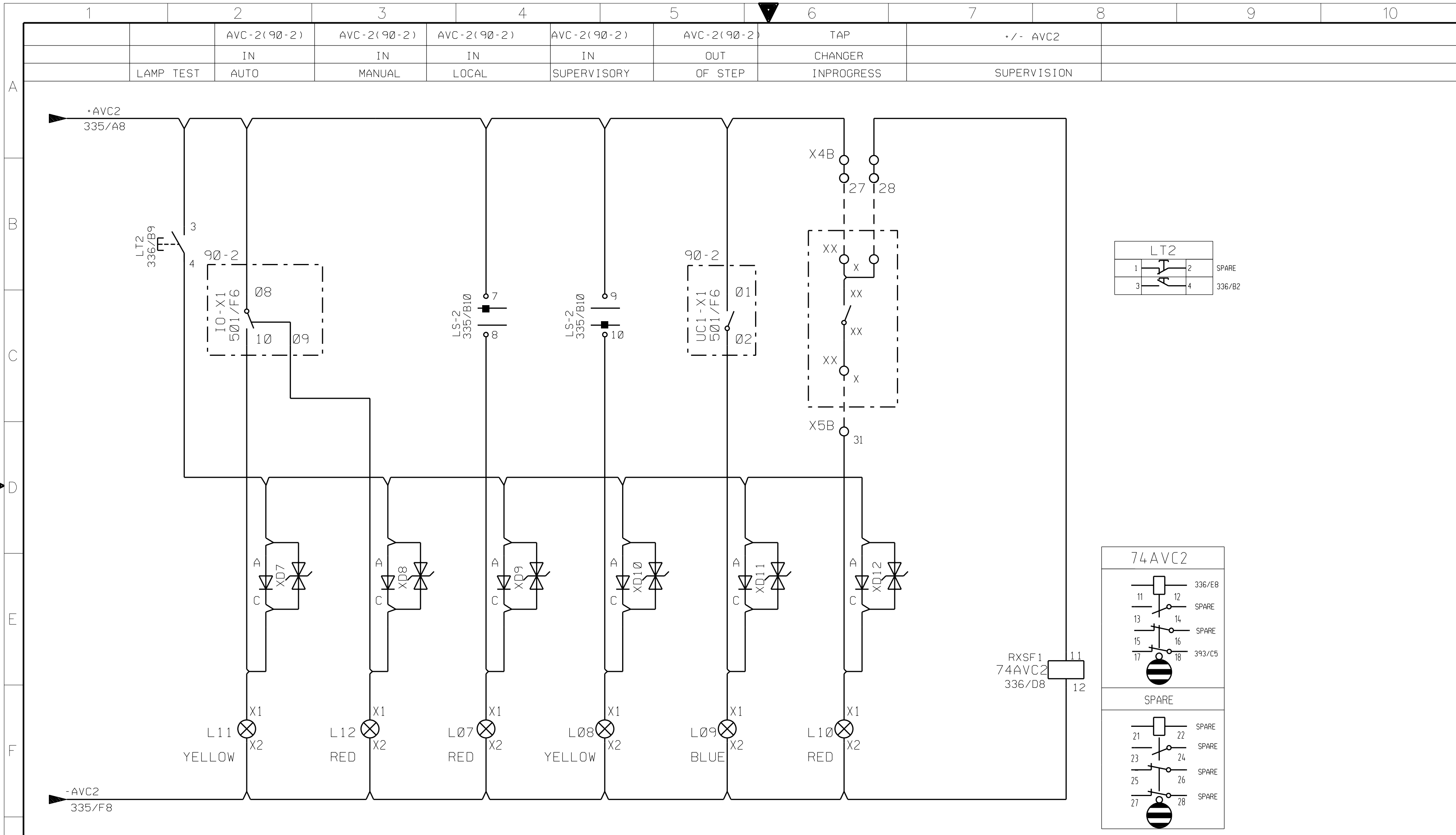

AS-BUILT BY ________ DATE ________	CONTRACT NO. 11131113/00	JOB ORDER NO. S-13020

REV. NO.	DATE	DESCRIPTION
01	13 25	AS PER SEC COMMENT
00	13 06	FOR APPROVAL

DRAWN BY RIZ CHECKED BY JKR
DATE STARTED 04.02.2013 DATE COMPLETED
OPRG. DEPT. CTPD ENG. DEPT. AUT-PSAC

INDICATION CIRCUIT-GT2

132/13.8KV (GT1,GT2,GT3) AVC PANEL

S/S 8709 - 132/13.8KV IN AL-KHARJ CITY

RIYADH SAUDI ARABIA

الشركة الوطنية لنقل الكهرباء
نقل الكهرباء National Grid SA

INDEX	PLANT NO.	DRAWING NUMBER	SHT	CONT.	REV. NO.
-	C421	CD-322936	336	337	01

NG/D2-D (2012/01)
DMS VECTOR NGD200

THIS DRAWING AND THE INFORMATION CONTAINED HEREIN ARE THE SOLE PROPERTY OF NATIONAL GRID SA NO REPRODUCTION IN FULL OR IN PART SHALL BE OBTAINED FROM THIS DOCUMENT WITHOUT THE WRITTEN CONSENT OF ITS OWNER.

CD-322936.0336.0000.dgn 7/8/2013 4:59:37 PM

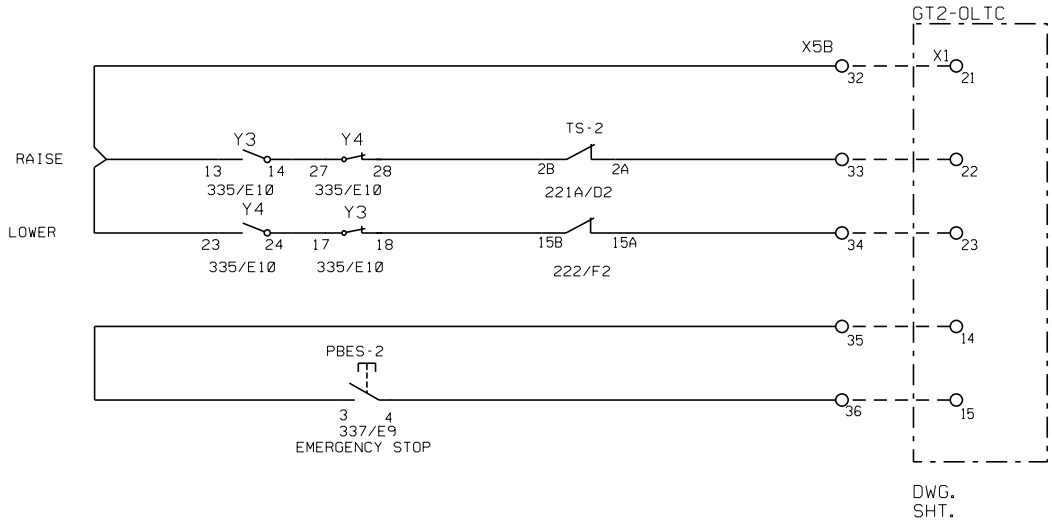

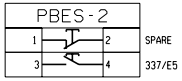

AS-BUILT BY ____ DATE ____	CONTRACT NO. 11131113/00	JOB ORDER NO. S-13020

REV. NO.	DATE	DESCRIPTION
01	13 25	AS PER SEC COMMENT
00	13 06	FOR APPROVAL

DRAWN BY RIZ CHECKED BY JKR
DATE STARTED 04.02.2013 DATE COMPLETED ____
OPRG. DEPT. CTPD ENG. DEPT. AUT-PSAC

TAP CHANGER RAISE/LOWER CIRCUITS
132/13.8KV (GT1,GT2,GT3) AVC PANEL
S/S 8709 - 132/13.8KV IN AL-KHARJ CITY
RIYADH SAUDI ARABIA

الشركة الوطنية لنقل الكهرباء
نقل الكهرباء
National Grid SA

INDEX	PLANT NO.	DRAWING NUMBER	SHEET NO. SHT	SHEET NO. CONT.	REV. NO.
-	C421	CD-322936	337	393	01

NG/D2-D (2012/01)
DMS VECTOR NGD200

THIS DRAWING AND THE INFORMATION CONTAINED HEREIN ARE THE SOLE PROPERTY OF NATIONAL GRID SA NO REPRODUCTION IN FULL OR IN PART SHALL BE OBTAINED FROM THIS DOCUMENT WITHOUT THE WRITTEN CONSENT OF ITS OWNER.

		PARALLEL	
AVC-2 RELAY	DC SUPPLY	FAILURE	
FAIL	FAILED	FAILED	

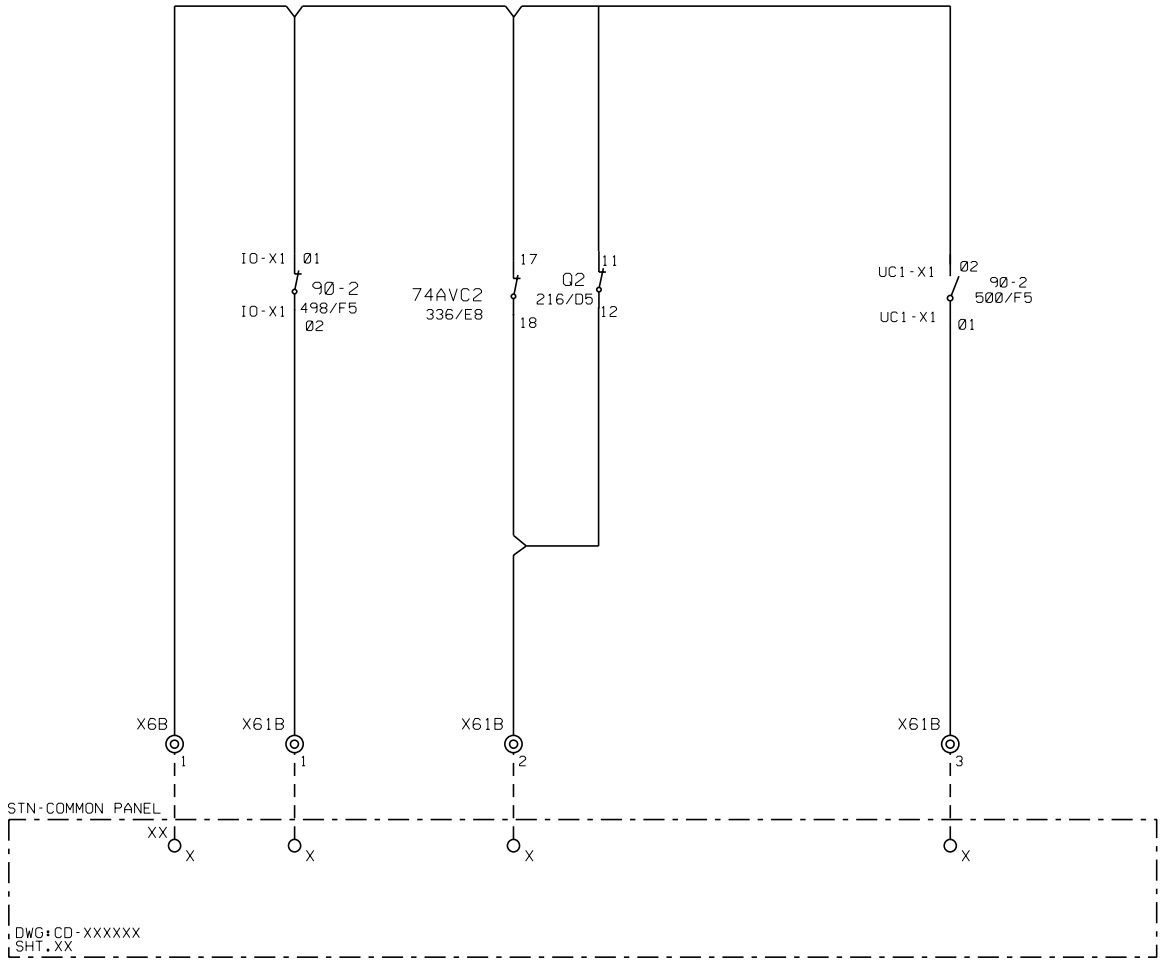

AS-BUILT BY _____ DATE _____ | CONTRACT NO. 11131113/00 | JOB ORDER NO. S-13020

REV. NO.	DATE	DESCRIPTION
Ø1	13 25	AS PER SEC COMMENT
ØØ	13 Ø6	FOR APPROVAL

DRAWN BY RIZ CHECKED BY JKR
DATE STARTED Ø4.Ø2.2Ø13 DATE COMPLETED _____
ORGN. DEPT. CTPD ENG. DEPT. AUT-PSAC

STN-COMMON ALARM CIRCUIT
132/13.8KV (GT1,GT2,GT3) AVC PANEL
S/S 8709 - 132/13.8KV IN AL-KHARJ CITY
RIYADH SAUDI ARABIA

الشركة الوطنية لنقل الكهرباء
نقل الكهرباء
National Grid SA

INDEX	PLANT NO.	DRAWING NUMBER	SHEET NO. SHT	SHEET NO. CONT.	REV. NO.
-	C421	CD-322936	393	431	Ø1

NG/D2-D (2012/Ø1)
DMS VECTOR NGD2ØØ

THIS DRAWING AND THE INFORMATION CONTAINED HEREIN ARE THE SOLE PROPERTY OF NATIONAL GRID SA NO REPRODUCTION IN FULL OR IN PART SHALL BE OBTAINED FROM THIS DOCUMENT WITHOUT THE WRITTEN CONSENT OF ITS OWNER.

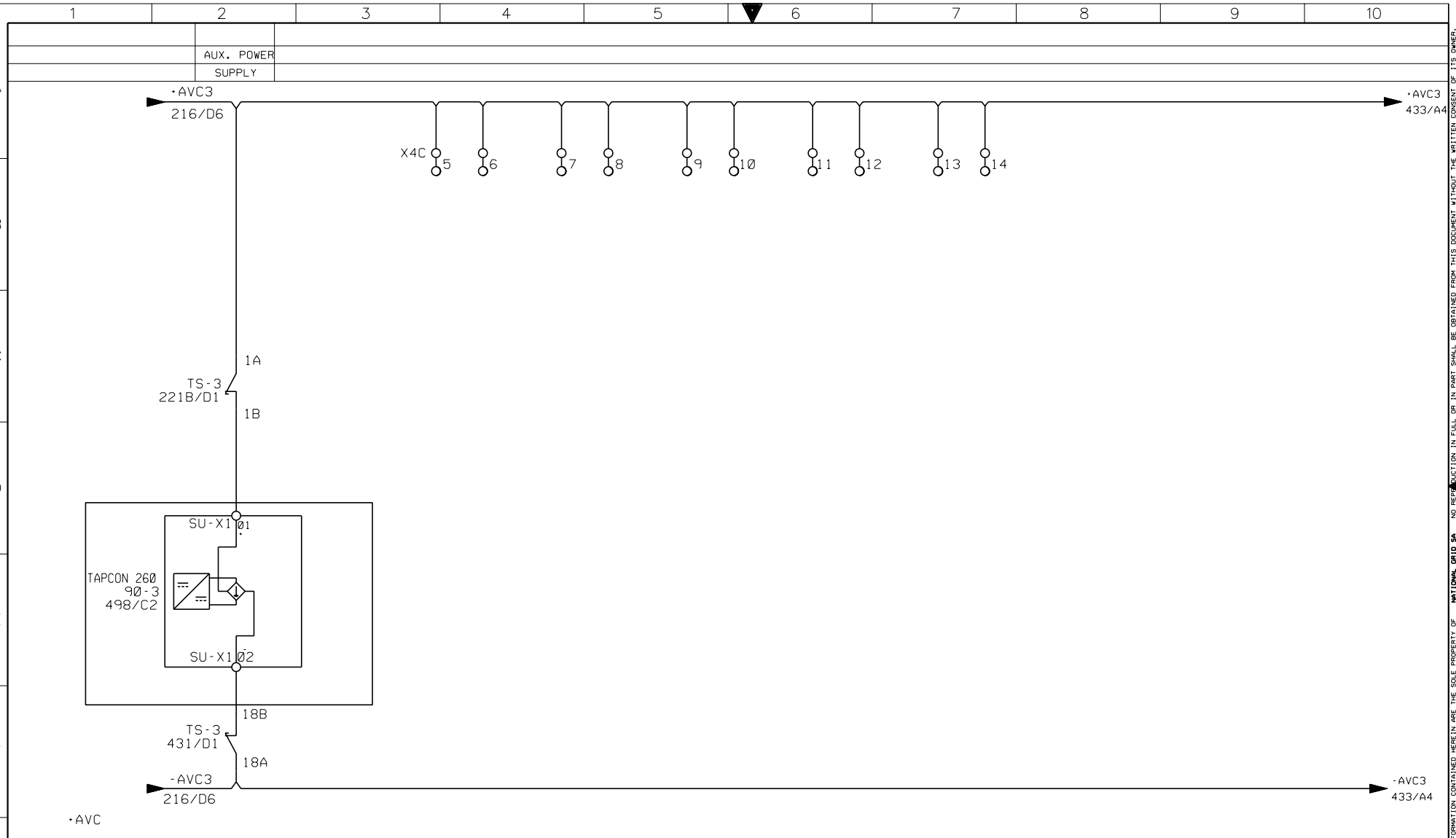

AS-BUILT BY _____ DATE _____	CONTRACT NO. 11131113/00	JOB ORDER NO. S-13020

REV. NO.	DATE	DESCRIPTION
01	13 25	AS PER SEC COMMENT
00	13 06	FOR APPROVAL

DRAWN BY RIZ CHECKED BY JKR
DATE STARTED 04.02.2013 DATE COMPLETED
ORGG. DEPT. CTPD ENG. DEPT. AUT-PSAC

BINARY INPUTS-GT3
132/13.8KV (GT1,GT2,GT3) AVC PANEL
S/S 8709 - 132/13.8KV IN AL-KHARJ CITY
RIYADH SAUDI ARABIA

الشركة الوطنية لنقل الكهرباء
نقل الكهرباء
National Grid SA

INDEX	PLANT NO.	DRAWING NUMBER	SHEET NO. SHT	SHEET NO. CONT.	REV. NO.
-	C421	CD-322936	431	433	01

NG/D2-D (2012/01)
DMS VECTOR NGD200

THIS DRAWING AND THE INFORMATION CONTAINED HEREIN ARE THE SOLE PROPERTY OF NATIONAL GRID SA NO REPRODUCTION IN FULL OR IN PART SHALL BE OBTAINED FROM THIS DOCUMENT WITHOUT THE WRITTEN CONSENT OF ITS OWNER.

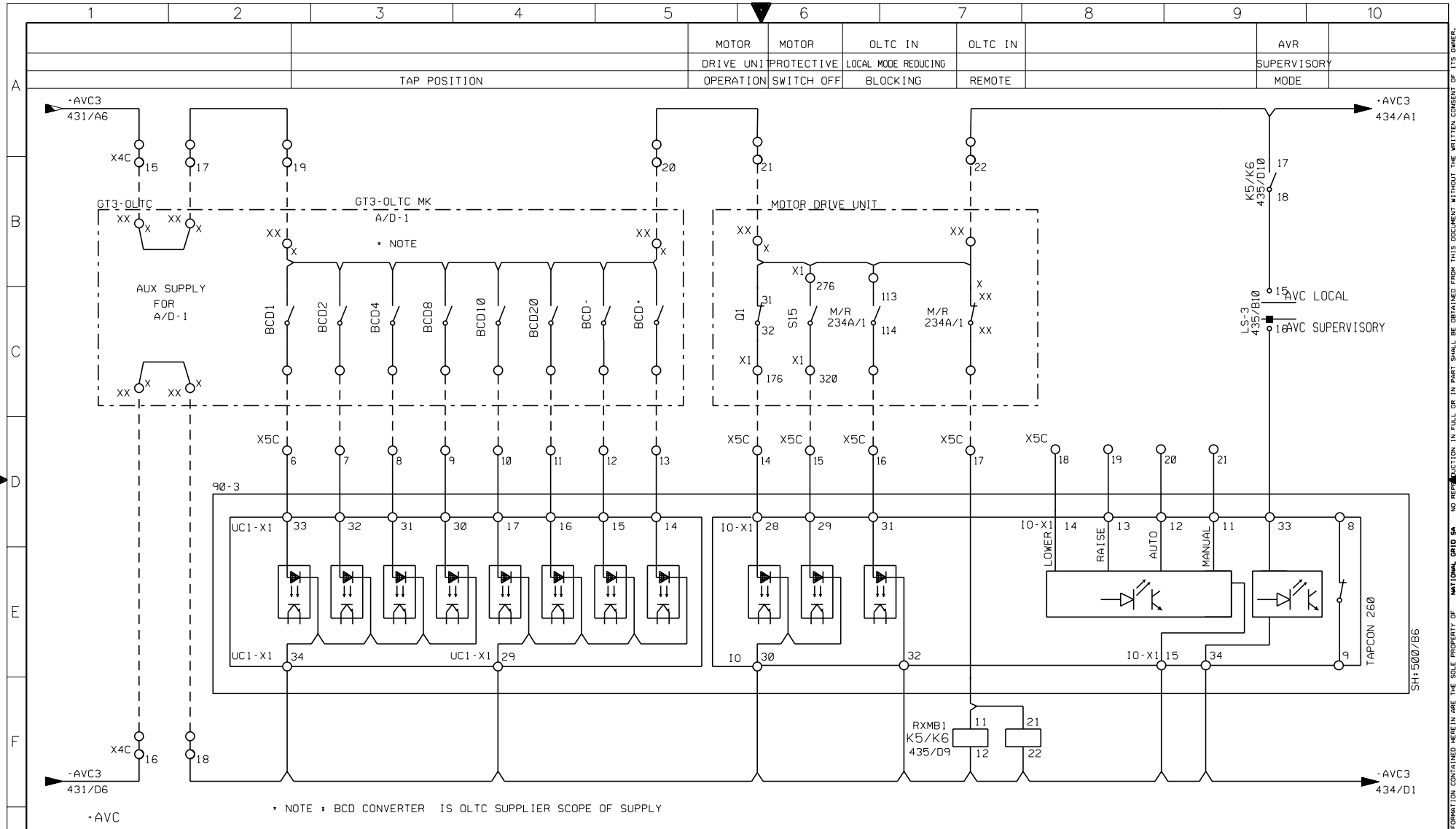

REV. NO.	DATE	DESCRIPTION
01	13 25	AS PER SEC COMMENT
00	13 06	FOR APPROVAL

AS-BUILT BY _____ DATE _____

CONTRACT NO. 11131113/00 | JOB ORDER NO. S-13020

DRAWN BY RIZ CHECKED BY JKR

DATE STARTED 04.02.2013 DATE COMPLETED _____

OPRG. DEPT. CTPD ENG. DEPT. AUT-PSAC

BINARY INPUTS-GT3

132/13.8KV (GT1,GT2,GT3) AVC PANEL

S/S 8709 - 132/13.8KV IN AL-KHARJ CITY

RIYADH SAUDI ARABIA

الشركة الوطنية لنقل الكهرباء

National Grid SA

INDEX	PLANT NO.	DRAWING NUMBER	SHEET NO. SHT	SHEET NO. CONT.	REV. NO.
-	C421	CD-322936	433	434	01

NG/D2-D (2012/01)

DMS VECTOR NGD200

THIS DRAWING AND THE INFORMATION CONTAINED HEREIN ARE THE SOLE PROPERTY OF NATIONAL GRID SA NO REPRODUCTION IN FULL OR IN PART SHALL BE OBTAINED FROM THIS DOCUMENT WITHOUT THE WRITTEN CONSENT OF ITS OWNER.

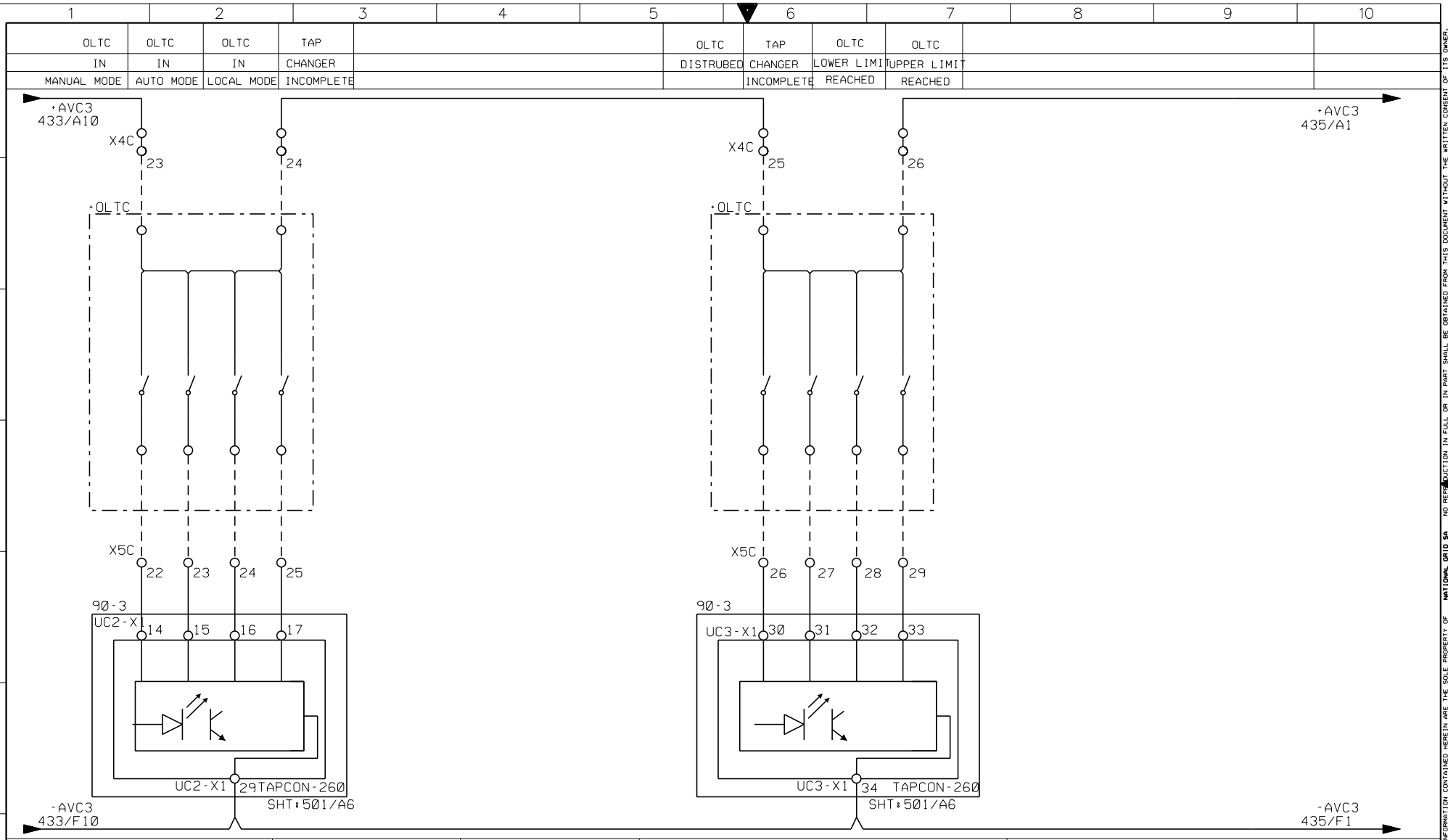

AS-BUILT BY _____ DATE _____	CONTRACT NO. 11131113/00	JOB ORDER NO. S-13020

REV. NO.	DATE	DESCRIPTION
01	13 25	AS PER SEC COMMENT
00	13 06	FOR APPROVAL

DRAWN BY RIZ CHECKED BY JKR
DATE STARTED 04.02.2013 DATE COMPLETED _____
OPRG. DEPT. CTPD ENG. DEPT. AUT-PSAC

BINARY INPUTS-GT3
132/13.8KV (GT1,GT2,GT3) AVC PANEL
S/S 8709 - 132/13.8KV IN AL-KHARJ CITY
RIYADH SAUDI ARABIA

الشركة الوطنية لنقل الكهرباء
نقل الكهرباء
National Grid SA

INDEX	PLANT NO.	DRAWING NUMBER	SHEET NO. SHT	SHEET NO. CONT.	REV. NO.
-	C421	CD-322936	434	435	01

NG/D2-D (2012/01)
DMS VECTOR NGD200

THIS DRAWING AND THE INFORMATION CONTAINED HEREIN ARE THE SOLE PROPERTY OF NATIONAL GRID SA NO REPRODUCTION IN FULL OR IN PART SHALL BE OBTAINED FROM THIS DOCUMENT WITHOUT THE WRITTEN CONSENT OF ITS OWNER.

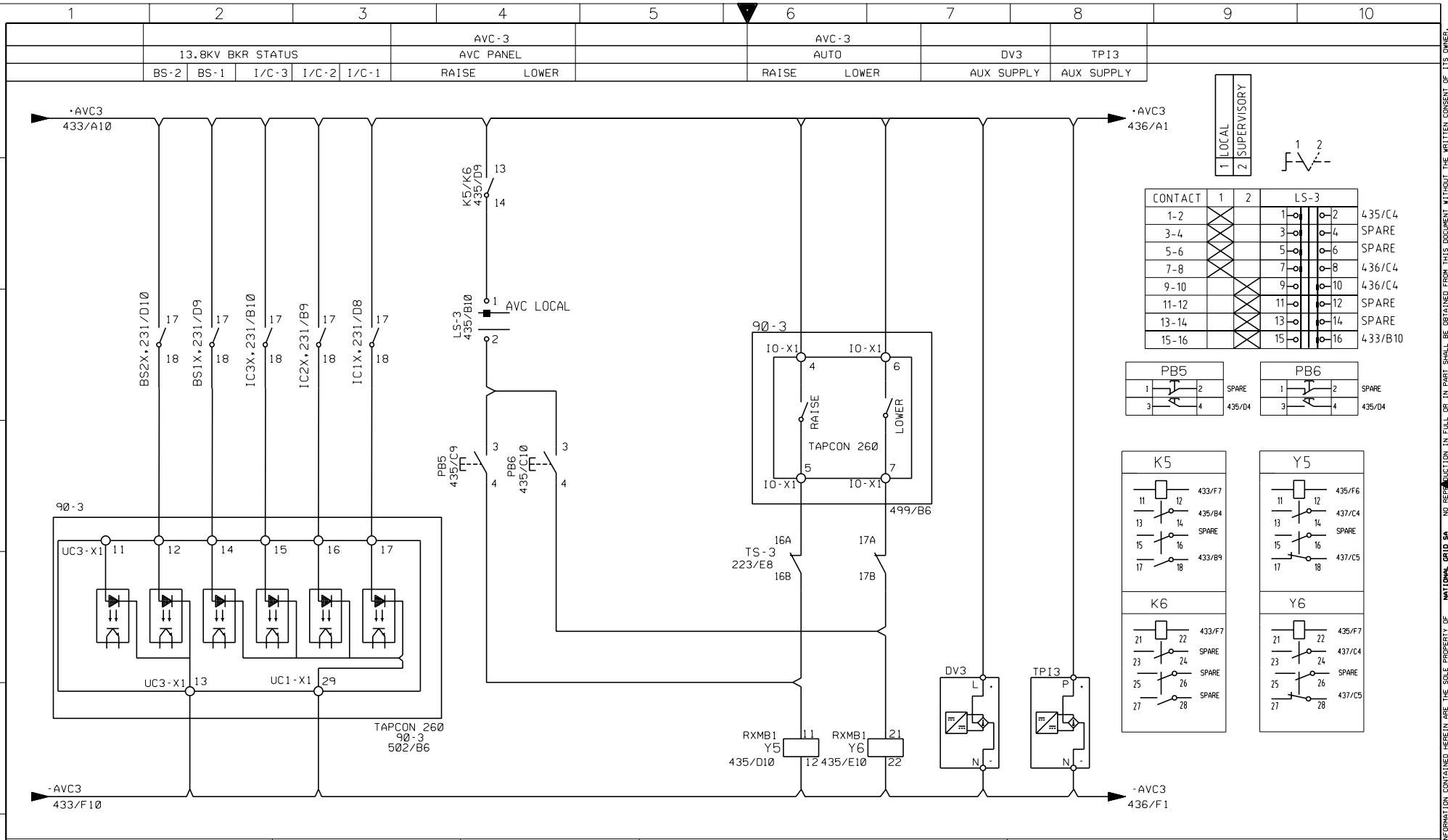

AS-BUILT BY _____ DATE _____	CONTRACT NO. 11131113/00	JOB ORDER NO. S-13020

REV. NO.	DATE	DESCRIPTION
01	13 25	AS PER SEC COMMENT
00	13 06	FOR APPROVAL

DRAWN BY RIZ CHECKED BY JKR
DATE STARTED 04.02.2013 DATE COMPLETED _____
OPRG. DEPT. CTPD ENG. DEPT. AUT-PSAC

TAP CHANGER RAISE/LOWER CIRCUITS
132/13.8KV (GT1,GT2,GT3) AVC PANEL
S/S 8709 - 132/13.8KV IN AL-KHARJ CITY
RIYADH SAUDI ARABIA

الشركة الوطنية لنقل الكهرباء
نقل الكهرباء
National Grid SA

INDEX	PLANT NO.	DRAWING NUMBER	SHEET NO. SHT	SHEET NO. CONT.	REV. NO.
-	C421	CD-322936	435	436	01

NG/D2-D (2012/01)
DMS VECTOR NGD200

THIS DRAWING AND THE INFORMATION CONTAINED HEREIN ARE THE SOLE PROPERTY OF NATIONAL GRID SA NO REPRODUCTION IN FULL OR IN PART SHALL BE OBTAINED FROM THIS DOCUMENT WITHOUT THE WRITTEN CONSENT OF ITS OWNER.

	AVC-3(90-3)	AVC-3(90-3)	AVC-3(90-3)	AVC-3(90-3)	AVC-3(90-3)	TAP	+/- AVC3
	IN	IN	IN	IN	OUT	CHANGER	
LAMP TEST	AUTO	MANUAL	LOCAL	SUPERVISORY	OF STEP	INPROGRESS	SUPERVISION

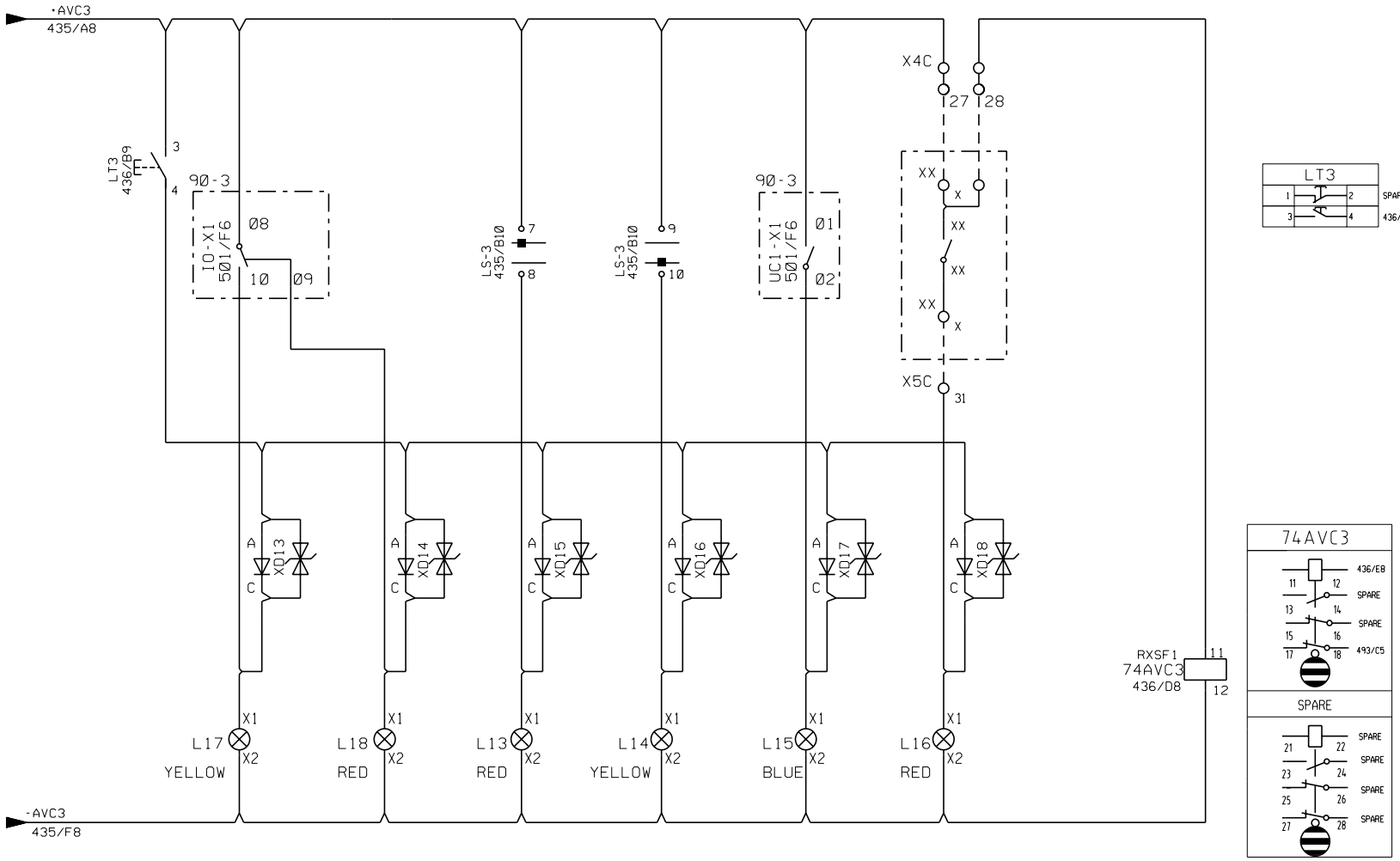

AS-BUILT BY _____ DATE _____	CONTRACT NO. 11131113/00	JOB ORDER NO. S-13020	INDICATION CIRCUIT-GT3	الشركة الوطنية لنقل الكهرباء	نقل الكهرباء National Grid SA
			132/13.8KV (GT1,GT2,GT3) AVC PANEL		
01 / 13 25 / AS PER SEC COMMENT	DRAWN BY RIZ	CHECKED BY JKR	S/S 8709 - 132/13.8KV IN AL-KHARJ CITY		
00 / 13 06 / FOR APPROVAL	DATE STARTED 04.02.2013	DATE COMPLETED	RIYADH SAUDI ARABIA		
REV. NO. / DATE / DESCRIPTION	OPRG. DEPT. CTPD	ENG. DEPT. AUT-PSAC			

INDEX	PLANT NO.	DRAWING NUMBER	SHEET NO. SHT	SHEET NO. CONT.	REV. NO.
-	C421	CD-322936	436	437	01

NG/D2-D (2012/01)

DMS | VECTOR | NGD200

THIS DRAWING AND THE INFORMATION CONTAINED HEREIN ARE THE SOLE PROPERTY OF NATIONAL GRID SA NO REPRODUCTION IN FULL OR IN PART SHALL BE OBTAINED FROM THIS DOCUMENT WITHOUT THE WRITTEN CONSENT OF ITS OWNER.

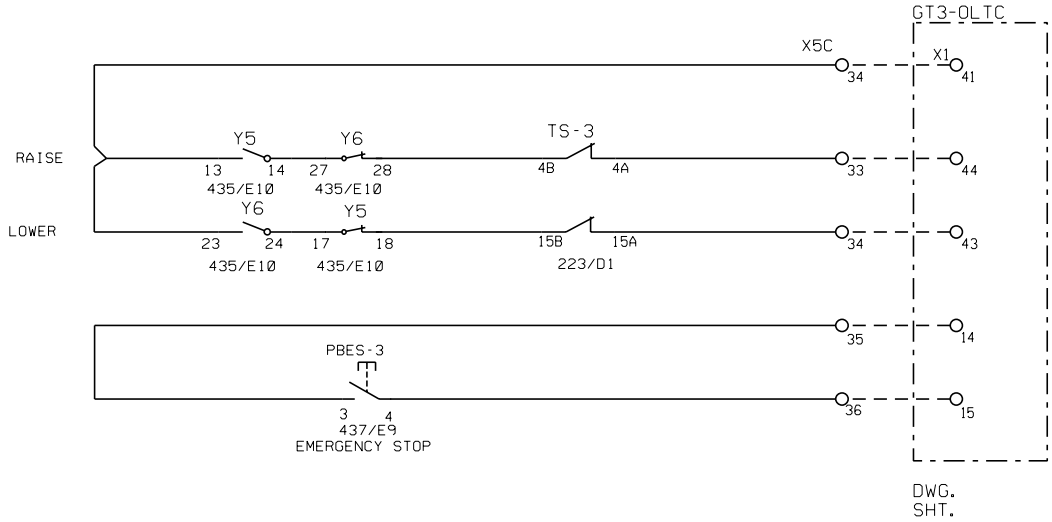

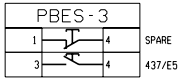

AS-BUILT BY _____ DATE _____	CONTRACT NO. 11131113/00	JOB ORDER NO. S-13020

REV. NO.	DATE	DESCRIPTION
01	13 25	AS PER SEC COMMENT
00	13 06	FOR APPROVAL

DRAWN BY RIZ CHECKED BY JKR
DATE STARTED 04.02.2013 DATE COMPLETED _____
OPRG. DEPT. CTPD ENG. DEPT. AUT-PSAC

TAP CHANGER RAISE/LOWER CIRCUITS
132/13.8KV (GT1,GT2,GT3) AVC PANEL
S/S 8709 - 132/13.8KV IN AL-KHARJ CITY
RIYADH SAUDI ARABIA

الشركة الوطنية لنقل الكهرباء
نقل الكهرباء
National Grid SA

INDEX	PLANT NO.	DRAWING NUMBER	SHEET NO. SHT	SHEET NO. CONT.	REV. NO.
-	C421	CD-322936	437	493	01

NG/D2-D (2012/01)
DMS VECTOR NGD200

THIS DRAWING AND THE INFORMATION CONTAINED HEREIN ARE THE SOLE PROPERTY OF NATIONAL GRID SA NO REPRODUCTION IN FULL OR IN PART SHALL BE OBTAINED FROM THIS DOCUMENT WITHOUT THE WRITTEN CONSENT OF ITS OWNER.

		PARALLEL	
AVC-3 RELAY	DC SUPPLY	FAILURE	
FAIL	FAILED	FAILED	

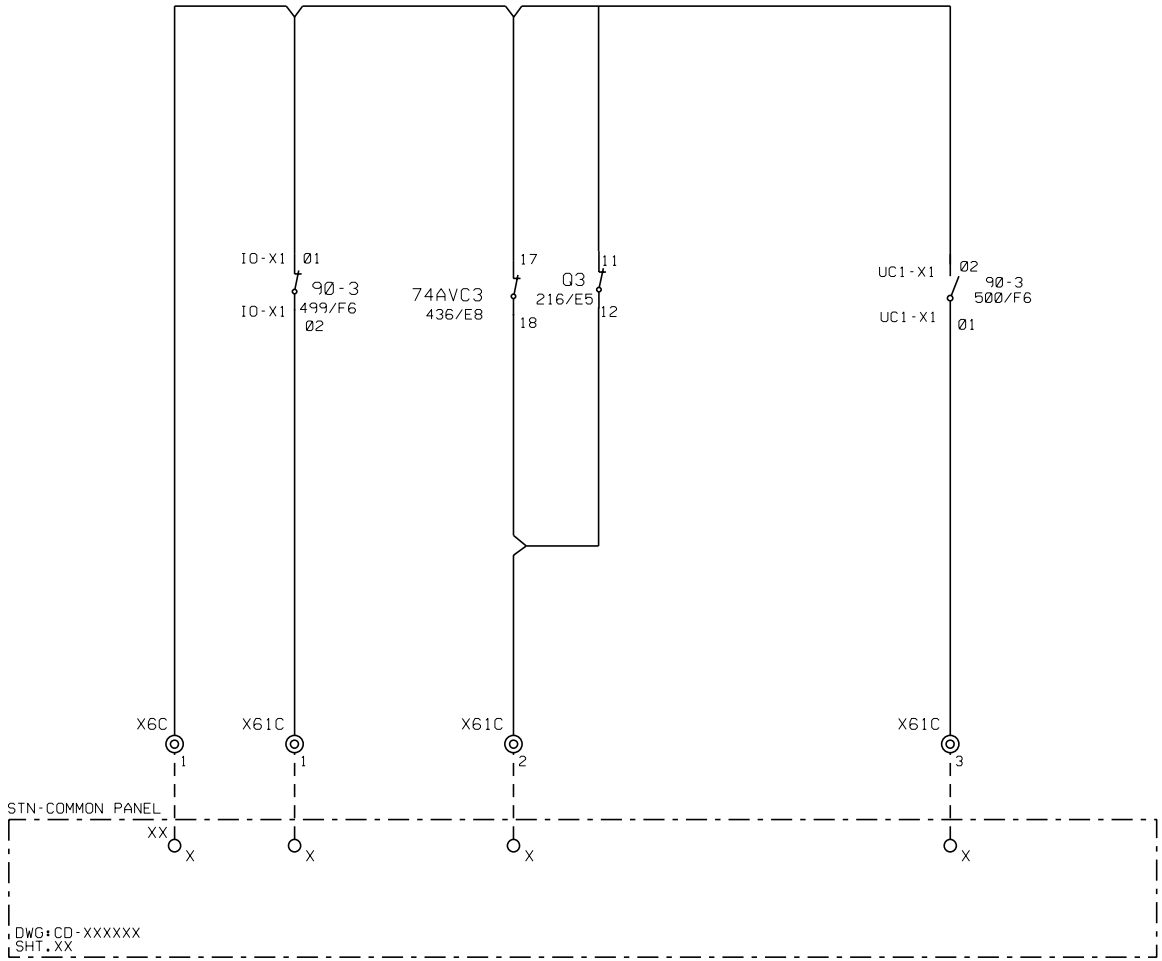

AS-BUILT BY _____ DATE _____ | CONTRACT NO. 11131113/00 | JOB ORDER NO. S-13020

REV. NO.	DATE	DESCRIPTION
Ø1	13 25	AS PER SEC COMMENT
ØØ	13 Ø6	FOR APPROVAL

DRAWN BY RIZ CHECKED BY JKR
DATE STARTED Ø4.Ø2.2Ø13 DATE COMPLETED _____
ORGN. DEPT. CTPD ENG. DEPT. AUT-PSAC

STN-COMMON ALARM CIRCUIT
132/13.8KV (GT1,GT2,GT3) AVC PANEL
S/S 8709 - 132/13.8KV IN AL-KHARJ CITY
RIYADH SAUDI ARABIA

الشركة الوطنية لنقل الكهرباء
نقل الكهرباء
National Grid SA

INDEX	PLANT NO.	DRAWING NUMBER	SHEET NO. SHT	SHEET NO. CONT.	REV. NO.
-	C421	CD-322936	493	498	Ø1

NG/D2-D (2012/Ø1)
DMS VECTOR NGD2ØØ

THIS DRAWING AND THE INFORMATION CONTAINED HEREIN ARE THE SOLE PROPERTY OF NATIONAL GRID SA NO REPRODUCTION IN FULL OR IN PART SHALL BE OBTAINED FROM THIS DOCUMENT WITHOUT THE WRITTEN CONSENT OF ITS OWNER.

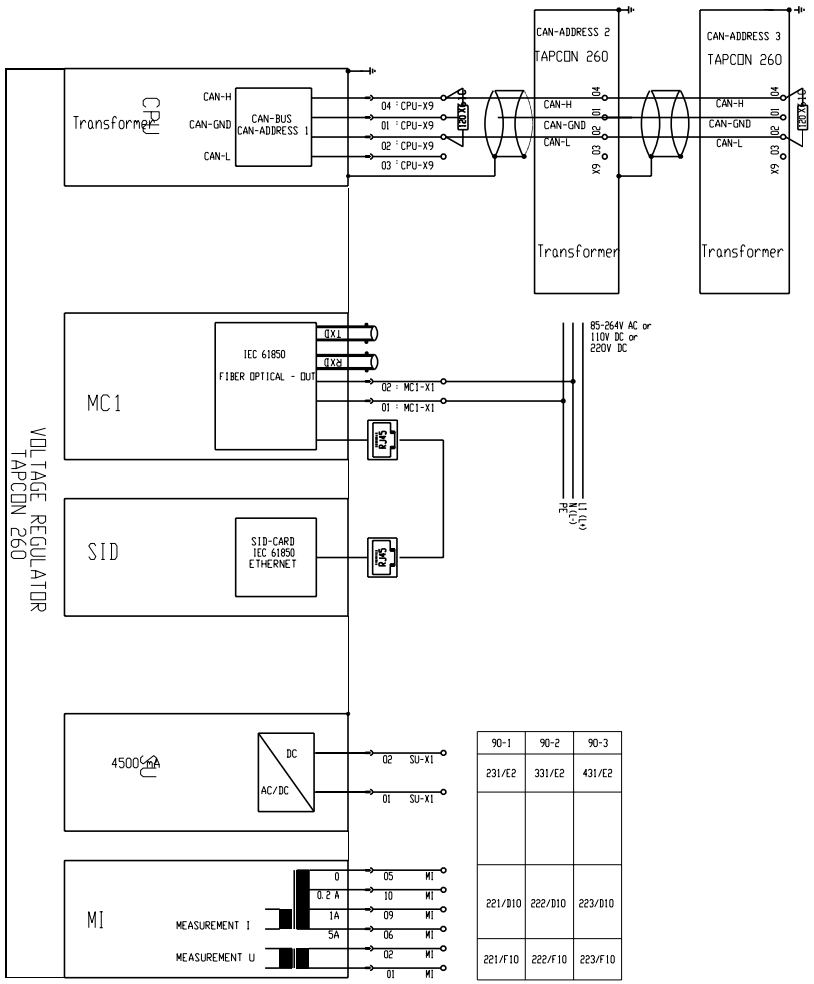

90-1	90-2	90-3
231/E2	331/E2	431/E2
221/D10	222/D10	223/D10
221/F10	222/F10	223/F10

AS-BUILT BY _____ DATE _____ | CONTRACT NO. 11131113/00 | JOB ORDER NO. S-13020

REV. NO.	DATE	DESCRIPTION
01	13 25	AS PER SEC COMMENT
00	13 06	FOR APPROVAL

DRAWN BY RIZ CHECKED BY JKR
DATE STARTED 04.02.2013 DATE COMPLETED _____
OPRG. DEPT. CTPD ENG. DEPT. AUT-PSAC

AVR BLOCK DIAGRAM

132/13.8KV (GT1,GT2,GT3) AVC PANEL

S/S 8709 - 132/13.8KV IN AL-KHARJ CITY

RIYADH SAUDI ARABIA

الشركة الوطنية لنقل الكهرباء
نقل الكهرباء
National Grid SA

INDEX	PLANT NO.	DRAWING NUMBER	SHEET NO. SHT	SHEET NO. CONT.	REV. NO.
-	C421	CD-322936	498	499	01

NG/D2-D (2012/01)
DMS | VECTOR | NGD200

THIS DRAWING AND THE INFORMATION CONTAINED HEREIN ARE THE SOLE PROPERTY OF NATIONAL GRID SA NO REPRODUCTION IN FULL OR IN PART SHALL BE OBTAINED FROM THIS DOCUMENT WITHOUT THE WRITTEN CONSENT OF ITS OWNER.

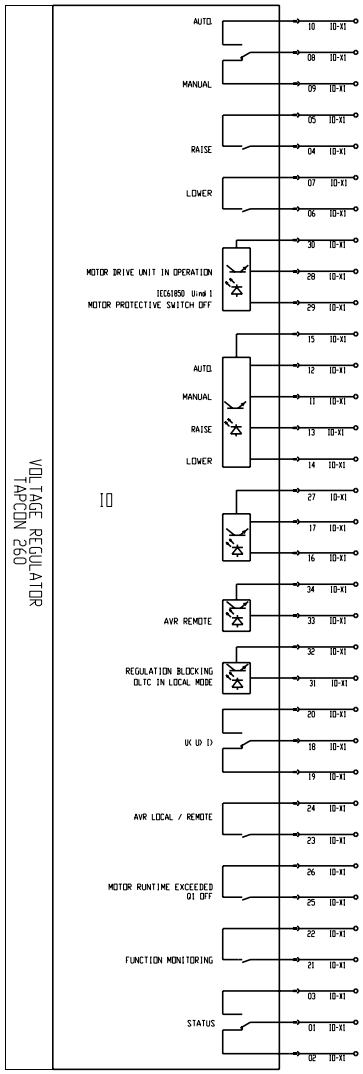

90-1	90-2	90-3
SPARE	SPARE	SPARE
235/C6	335/C6	435/C6
235/C6	335/C6	435/C6
233/E6	333/E6	433/E6
233/E9	333/E9	433/E9
SPARE	SPARE	SPARE
233/E9	333/E9	433/E9
233/E7	333/E7	433/E7
SPARE	SPARE	SPARE
SPARE	SPARE	SPARE
SPARE	SPARE	SPARE
SPARE	SPARE	SPARE
293/C4	493/C4	593/C4

AS-BUILT BY _____ DATE _____ | CONTRACT NO. 11131113/00 | JOB ORDER NO. S-13020

REV. NO.	DATE	DESCRIPTION
01	13 25	AS PER SEC COMMENT
00	13 06	FOR APPROVAL

DRAWN BY RIZ CHECKED BY JKR
DATE STARTED 04.02.2013 DATE COMPLETED _____
OPRG. DEPT. CTPD ENG. DEPT. AUT-PSAC

AVR BLOCK DIAGRAM

132/13.8KV (GT1,GT2,GT3) AVC PANEL

S/S 8709 - 132/13.8KV IN AL-KHARJ CITY

RIYADH SAUDI ARABIA

الشركة الوطنية لنقل الكهرباء
نقل الكهرباء
National Grid SA

INDEX	PLANT NO.	DRAWING NUMBER	SHEET NO. SHT	SHEET NO. CONT.	REV. NO.
-	C421	CD-322936	499	500	01

NG/D2-D (2012/01)

DMS | VECTOR | NGD200

THIS DRAWING AND THE INFORMATION CONTAINED HEREIN ARE THE SOLE PROPERTY OF NATIONAL GRID SA NO REPRODUCTION IN FULL OR IN PART SHALL BE OBTAINED FROM THIS DOCUMENT WITHOUT THE WRITTEN CONSENT OF ITS OWNER.

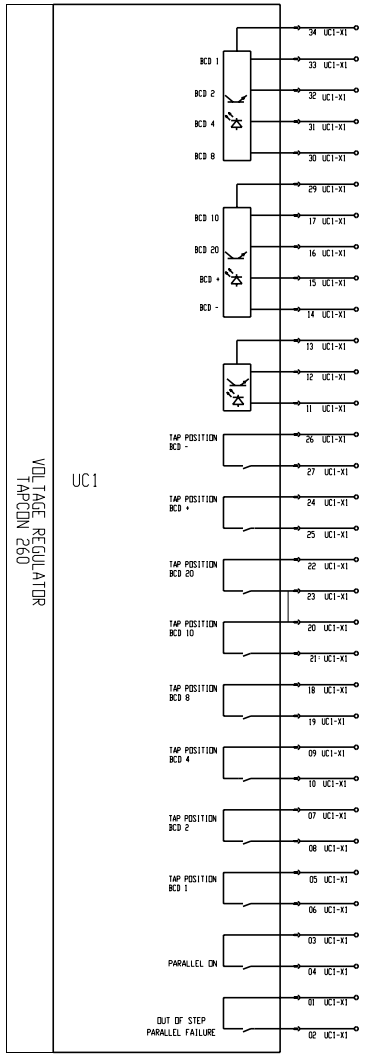

90-1	90-2	90-3
233/E3	333/E3	433/E3
233/E4	333/E4	433/E4
SPARE	SPARE	SPARE
SPARE	SPARE	SPARE
SPARE	SPARE	SPARE
SPARE	SPARE	SPARE
SPARE	SPARE	SPARE
SPARE	SPARE	SPARE
SPARE	SPARE	SPARE
SPARE	SPARE	SPARE
SPARE	SPARE	SPARE
SPARE	SPARE	SPARE
293/C6	393/C6	493/C6

AS-BUILT BY _____ DATE _____ | CONTRACT NO. 11131113/00 | JOB ORDER NO. S-13020

REV. NO.	DATE	DESCRIPTION
01	13 25	AS PER SEC COMMENT
00	13 06	FOR APPROVAL

DRAWN BY RIZ CHECKED BY JKR
DATE STARTED 04.02.2013 DATE COMPLETED _____
ORG. DEPT. CTPD ENG. DEPT. AUT-PSAC

AVR BLOCK DIAGRAM
132/13.8KV (GT1,GT2,GT3) AVC PANEL
S/S 8709 - 132/13.8KV IN AL-KHARJ CITY
RIYADH SAUDI ARABIA

الشركة الوطنية لنقل الكهرباء
نقل الكهرباء
National Grid SA

INDEX	PLANT NO.	DRAWING NUMBER	SHEET NO. SHT	SHEET NO. CONT.	REV. NO.
-	C421	CD-322936	500	501	01

NG/D2-D (2012/01)
DMS | VECTOR | NGD200

THIS DRAWING AND THE INFORMATION CONTAINED HEREIN ARE THE SOLE PROPERTY OF NATIONAL GRID SA NO REPRODUCTION IN FULL OR IN PART SHALL BE OBTAINED FROM THIS DOCUMENT WITHOUT THE WRITTEN CONSENT OF ITS OWNER.

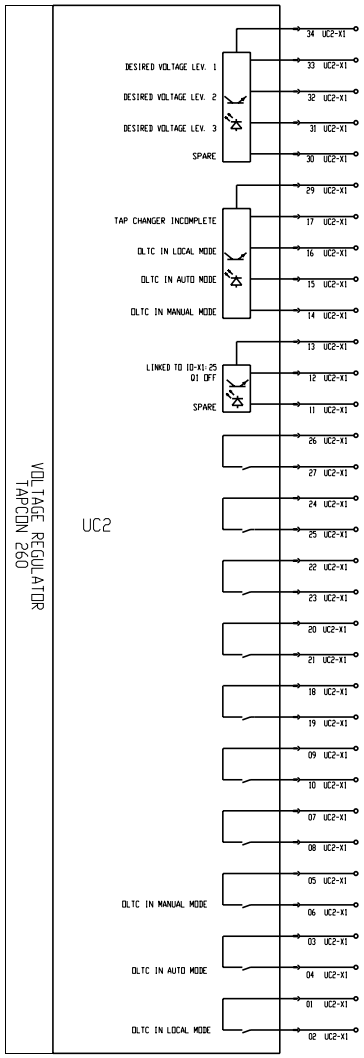

90-1	90-2	90-3
235/C4	335/C4	435/C4
235/E2	335/E2	435/E2
SPARE	SPARE	SPARE
SPARE	SPARE	SPARE
SPARE	SPARE	SPARE
SPARE	SPARE	SPARE
SPARE	SPARE	SPARE
SPARE	SPARE	SPARE
SPARE	SPARE	SPARE
SPARE	SPARE	SPARE
234/C4	334/C4	434/C4
234/C5	334/C4	434/C4

AS-BUILT BY _____ DATE _____ | CONTRACT NO. 11131113/00 | JOB ORDER NO. S-13020

REV. NO.	DATE	DESCRIPTION
01	13 25	AS PER SEC COMMENT
00	13 06	FOR APPROVAL

DRAWN BY RIZ CHECKED BY JKR
DATE STARTED 04.02.2013 DATE COMPLETED _____
OPRG. DEPT. CTPD ENG. DEPT. AUT-PSAC

AVR BLOCK DIAGRAM

132/13.8KV (GT1,GT2,GT3) AVC PANEL

S/S 8709 - 132/13.8KV IN AL-KHARJ CITY

RIYADH SAUDI ARABIA

الشركة الوطنية لنقل الكهرباء

نقل الكهرباء
National Grid SA

INDEX	PLANT NO.	DRAWING NUMBER	SHEET NO. SHT	SHEET NO. CONT.	REV. NO.
-	C421	CD-322936	501	502	01

NG/D2-D (2012/01)

DMS | VECTOR | NGD200

THIS DRAWING AND THE INFORMATION CONTAINED HEREIN ARE THE SOLE PROPERTY OF NATIONAL GRID SA NO REPRODUCTION IN FULL OR IN PART SHALL BE OBTAINED FROM THIS DOCUMENT WITHOUT THE WRITTEN CONSENT OF ITS OWNER.

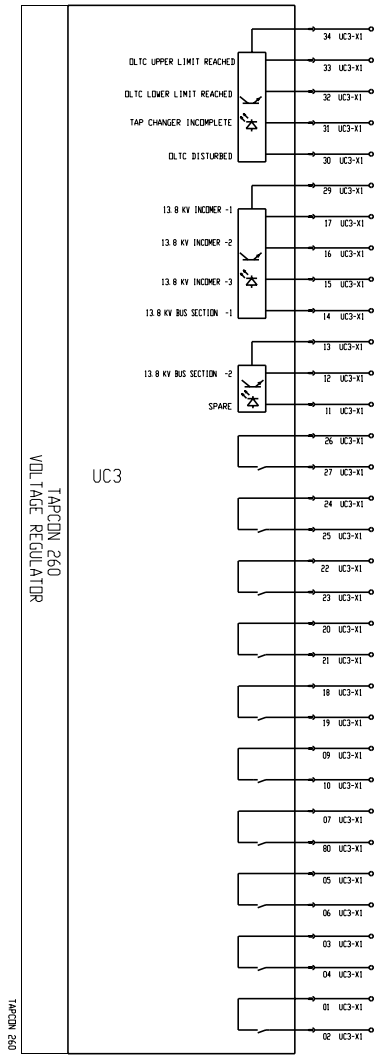

90-1	90-2	90-3
235/F7	335/F7	435/F7
235/E3	335/E3	435/E3
235/E3	335/E3	435/E3
SPARE	SPARE	SPARE
SPARE	SPARE	SPARE
SPARE	SPARE	SPARE
SPARE	SPARE	SPARE
SPARE	SPARE	SPARE
SPARE	SPARE	SPARE
SPARE	SPARE	SPARE
SPARE	SPARE	SPARE
SPARE	SPARE	SPARE

AS-BUILT BY _____ DATE _____ | CONTRACT NO. 11131113/00 | JOB ORDER NO. S-13020

REV. NO.	DATE	DESCRIPTION
01	13 25	AS PER SEC COMMENT
00	13 06	FOR APPROVAL

DRAWN BY RIZ CHECKED BY JKR
DATE STARTED 04.02.2013 DATE COMPLETED _____
OPRG. DEPT. CTPD ENG. DEPT. AUT-PSAC

AVR BLOCK DIAGRAM

132/13.8KV (GT1,GT2,GT3) AVC PANEL

S/S 8709 - 132/13.8KV IN AL-KHARJ CITY

RIYADH SAUDI ARABIA

الشركة الوطنية لنقل الكهرباء
نقل الكهرباء
National Grid SA

INDEX	PLANT NO.	DRAWING NUMBER	SHEET NO. SHT	SHEET NO. CONT.	REV. NO.
-	C421	CD-322936	502	503	01

NG/D2-D (2012/01)

DMS | VECTOR | NGD200

THIS DRAWING AND THE INFORMATION CONTAINED HEREIN ARE THE SOLE PROPERTY OF NATIONAL GRID SA NO REPRODUCTION IN FULL OR IN PART SHALL BE OBTAINED FROM THIS DOCUMENT WITHOUT THE WRITTEN CONSENT OF ITS OWNER.

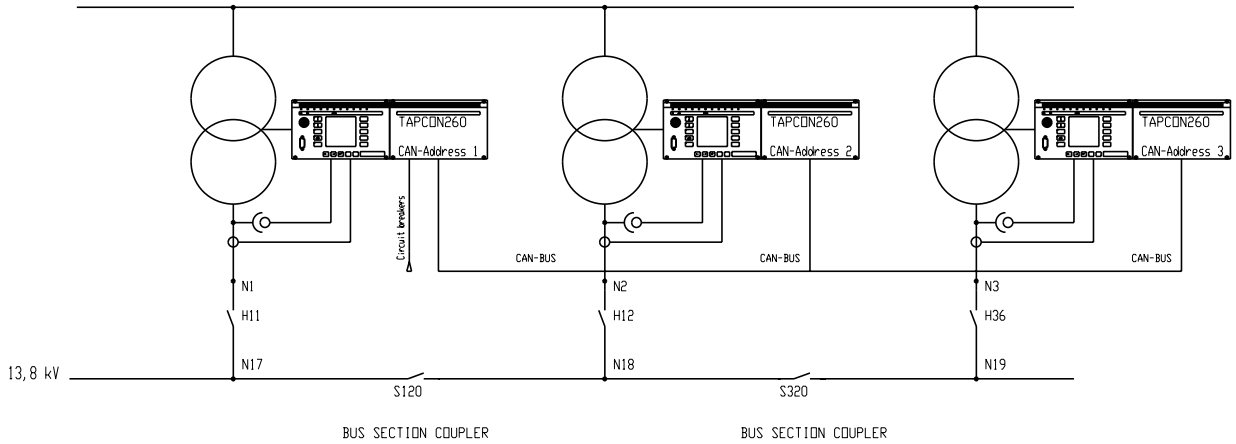

AS-BUILT BY _____ DATE _____	CONTRACT NO. 11131113/00	JOB ORDER NO. S-13020	AVR TOPOLOGY	الشركة الوطنية لنقل الكهرباء	نقل الكهرباء National Grid SA
			132/13.8KV (GT1,GT2,GT3) AVC PANEL		
01	13 25	AS PER SEC COMMENT	S/S 8709 - 132/13.8KV IN AL-KHARJ CITY		
00	13 06	FOR APPROVAL	RIYADH SAUDI ARABIA		
REV. NO.	DATE	DESCRIPTION			

DRAWN BY RIZ CHECKED BY JKR
DATE STARTED 04.02.2013 DATE COMPLETED _____
ORGG. DEPT. CTPD ENG. DEPT. AUT-PSAC

INDEX	PLANT NO.	DRAWING NUMBER	SHEET NO. SHT	SHEET NO. CONT.	REV. NO.
-	C421	CD-322936	503	504	01

NG/D2-D (2012/01)
DMS VECTOR NGD200

THIS DRAWING AND THE INFORMATION CONTAINED HEREIN ARE THE SOLE PROPERTY OF NATIONAL GRID SA NO REPRODUCTION IN FULL OR IN PART SHALL BE OBTAINED FROM THIS DOCUMENT WITHOUT THE WRITTEN CONSENT OF ITS OWNER.

REFERENCE	X1A CT CKTS.
221/C5	1
221/C5	2
221/C5	3
221/D5	4
221/D5	5
SPARE	6
SPARE	7

REFERENCE	X1B CT CKTS.
221A/C5	1
221A/C5	2
221A/C5	3
221A/D5	4
221A/D5	5
SPARE	6
SPARE	7

REFERENCE	X1C CT CKTS.
221B/C5	1
221B/C5	2
221B/C5	3
221B/D5	4
221B/D5	5
SPARE	6
SPARE	7

REFERENCE	X61A ANNUN CKTS.
212/D5	1
212/D5	2
293/E4	3
293/E5	4
293/E6	5
SPARE	6

REFERENCE	X61B ANNUN CKTS.
393/E4	1
393/E5	2
393/E6	3
SPARE	4

REFERENCE	X61C ANNUN CKTS.
493/E4	1
493/E5	2
493/E6	3
SPARE	4

REFERENCE	X2A VT CKTS.
221/E8	1
221/E8	2
SPARE	3
SPARE	4

REFERENCE	X2B VT CKTS.
221A/E8	1
221A/E8	2
SPARE	3
SPARE	4

REFERENCE	X2C VT CKTS.
221B/E8	1
221B/E8	2
SPARE	3
SPARE	4

REFERENCE	X5A EXT CKTS.
231/D3	1
231/D4	2
231/D4	3
231/D5	4
231/D5	5
233/D3	6
233/D3	7
233/D3	8
233/D3	9
233/D4	10
233/D4	11
233/D4	12
233/D5	13
233/D6	14
233/D6	15
233/D7	16
233/D8	17
233/D8	18
233/D8	19
233/D9	20
233/D9	21
234/E2	22
234/E2	23
234/E2	24
234/E3	25
234/E7	26
234/E7	27
234/E7	28
234/E8	29
SPARE	30
236/D9	31
237//C7	32
237/C7	33
237/D7	34
237/D7	35
237/D7	36
SPARE	37
SPARE	38
221/A8	39
221/B8	40

REFERENCE	X5B EXT CKTS.
331/D3	1
331/D4	2
331/D4	3
331/D5	4
331/D5	5
333/D3	6
333/D3	7
333/D3	8
333/D3	9
333/D4	10
333/D4	11
333/D4	12
333/D5	13
333/D6	14
333/D6	15
333/D7	16
333/D8	17
333/D8	18
333/D8	19
333/D9	20
333/D9	21
334/E2	22
334/E2	23
334/E2	24
334/E3	25
334/E7	26
334/E7	27
334/E7	28
334/E8	29
SPARE	30
336/D9	31
337//C7	32
337/C7	33
337/D7	34
337/D7	35
337/D7	36
SPARE	37
SPARE	38
222/A8	39
222/B8	40

REFERENCE	X5C EXT CKTS.
431/D3	1
431/D4	2
431/D4	3
431/D5	4
431/D5	5
433/D3	6
433/D3	7
433/D3	8
433/D3	9
433/D4	10
433/D4	11
433/D4	12
433/D5	13
433/D6	14
433/D6	15
433/D7	16
433/D8	17
433/D8	18
433/D8	19
433/D9	20
433/D9	21
434/E2	22
434/E2	23
434/E2	24
434/E3	25
434/E7	26
434/E7	27
434/E7	28
434/E8	29
SPARE	30
436/D9	31
437//C7	32
437/C7	33
437/D7	34
437/D7	35
437/D7	36
SPARE	37
SPARE	38
223/A8	39
223/B8	40

REFERENCE	X4A EXT CKTS.
216/B3	1
216/B3	2
SPARE	3
SPARE	4
231/A3	5
231/A4	6
231/A4	7
231/A5	8
231/A5	9
231/A6	10
231/A6	11
231/A6	12
231/A7	13
231/A7	14
233/A1	15
233/F1	16
233/A2	17
233/F2	18
233/A2	19
233/A5	20
233/A6	21
233/A7	22
234/A1	23
234/A3	24
234/A6	25

REFERENCE	X4B EXT CKTS.
216/B3	1
216/B3	2
SPARE	3
SPARE	4
331/A3	5
331/A4	6
331/A4	7
331/A5	8
331/A5	9
331/A6	10
331/A6	11
331/A6	12
331/A7	13
331/A7	14
333/A1	15
333/F1	16
333/A2	17
333/F2	18
333/A2	19
333/A5	20
333/A6	21
333/A7	22
334/A1	23
334/A3	24
334/A6	25

REFERENCE	X4B EXT CKTS.
216/E3	1
216/E3	2
SPARE	3
SPARE	4
431/A3	5
431/A4	6
431/A4	7
431/A5	8
431/A5	9
431/A6	10
431/A6	11
431/A6	12
431/A7	13
431/A7	14
433/A1	15
433/F1	16
433/A2	17
433/F2	18
433/A2	19
433/A5	20
433/A6	21
433/A7	22
434/A1	23
434/A3	24
434/A6	25

REFERENCE	X6A ANNUN CKTS.
212/B5	1
212/B5	2
293/E3	3
SPARE	4

REFERENCE	X6B ANNUN CKTS.
393/E3	1
SPARE	2

REFERENCE	X6C ANNUN CKTS.
493/E3	1
SPARE	2

AS-BUILT BY _____ DATE _____

CONTRACT NO. 11131113/00

JOB ORDER NO. S-13020

REV. NO.	DATE	DESCRIPTION
01	13 25	AS PER SEC COMMENT
00	13 06	FOR APPROVAL

DRAWN BY RIZ CHECKED BY JKR

DATE STARTED 04.02.2013 DATE COMPLETED _____

OPRG. DEPT. CTPD ENG. DEPT. AUT-PSAC

TERMINAL BLOCK REFERENCE

132/13.8KV (GT1,GT2,GT3) AVC PANEL

S/S 8709 - 132/13.8KV IN AL-KHARJ CITY

RIYADH SAUDI ARABIA

الشركة الوطنية لنقل الكهرباء

نقل الكهرباء National Grid SA

INDEX	PLANT NO.	DRAWING NUMBER	SHEET NO. SHT	SHEET NO. CONT.	REV. NO.
-	C421	CD-322936	504	505	01

NG/D2-D (2012/01)

DMS VECTOR NGD200

THIS DRAWING AND THE INFORMATION CONTAINED HEREIN ARE THE SOLE PROPERTY OF NATIONAL GRID SA NO REPRODUCTION IN FULL OR IN PART SHALL BE OBTAINED FROM THIS DOCUMENT WITHOUT THE WRITTEN CONSENT OF ITS OWNER.

REFERENCE
211/A3
211/A7
211/A3
211/A7
211/B3
211/B7
211/B3
211/B7
SPARE
SPARE

X3
AC CKTS.

REFERENCE
234A/D4
234A/D4
334A/D4
334A/D4
434A/D4
434A/D4
SPARE

XD
BLOCKING DIODE

REFERENCE
211/C3
211/C3
211/C3
211/D3
SPARE

XTJ
TELEPHONE JACK

REFERENCE
211/E6
211/F6
SPARE

XSH
SPACE HEATER

REFERENCE
212/B5
212/B5
293/E3
SPARE

X6A
ANNUN CKTS.

REFERENCE
393/E3
SPARE

X6B
ANNUN CKTS.

REFERENCE
493/E3
SPARE

X6C
ANNUN CKTS.

AS-BUILT BY _____ DATE _____ | CONTRACT NO. 11131113/00 | JOB ORDER NO. S-13020

REV. NO.	DATE	DESCRIPTION
01	13 25	AS PER SEC COMMENT
00	13 06	FOR APPROVAL

DRAWN BY RIZ CHECKED BY JKR
DATE STARTED 04.02.2013 DATE COMPLETED _____
OPRG. DEPT. CTPD ENG. DEPT. AUT-PSAC

TERMINAL BLOCK REFERENCE

132/13.8KV (GT1,GT2,GT3) AVC PANEL

S/S 8709 - 132/13.8KV IN AL-KHARJ CITY

RIYADH SAUDI ARABIA

الشركة الوطنية لنقل الكهرباء
نقل الكهرباء
National Grid SA

INDEX	PLANT NO.	DRAWING NUMBER	SHEET NO. SHT	SHEET NO. CONT.	REV. NO.
-	C421	CD-322936	505	NIL	01

NG/D2-D (2012/01)
DMS | VECTOR | NGD200

THIS DRAWING AND THE INFORMATION CONTAINED HEREIN ARE THE SOLE PROPERTY OF NATIONAL GRID SA NO REPRODUCTION IN FULL OR IN PART SHALL BE OBTAINED FROM THIS DOCUMENT WITHOUT THE WRITTEN CONSENT OF ITS OWNER.